www.ictgroup.com.tw

Coin Changer

CC6100

Series

Installation Guide

International Currency Technologies Corp.

Use of Materials Limitations

International Currency Technologies Corporation (ICT) all rights reserved.
All materials contained are the copyrighted property of ICT.
All trademarks, service marks, and trade names are proprietary to ICT.

ICT reserves the right at all times to disclose or to modify any information as ICT deems necessary to satisfy any applicable law, regulation, legal process or governmental request, or to edit, refuse to post or to remove any information or materials, in whole or in part, in ICT's sole discretion.

Contents

1. General Information
1-1. Features....3
1-2. System Specifications....3
1-3. Dimensions....5
1-4. Module Descriptions....6

2. Installation....7

3. Operation
3-1. EZ code overview....10
3-2. Dispensing Coins To Low Level....12
3-3. Operating Function Descriptions....13
3-4. Setting Function Descriptions....15
3-5. Executive Setting Function Descriptions....51
3-6. DIP Switch Setting....60

4. Harness Application
4-1. List of Main Wire Harness....63
4-2. List of Wire Harness for ICT Bill Acceptor....63
4-3. Wire Harness Pin Assignment for JPSTD interface....64
4-4. Wire Harness Pin Assignment for MDB interface....67
4-5. Wire Harness Pin Assignment for Executive & MDB Interface....70
4-6. Wire Harness Pin Assignment for Download Box....72

5. I/O Circuit....73

6. Maintenance....76

7. Troubleshooting
7-1. Error Code Messages....78
7-2. Error Handling....79

8. Firmware Download and Upgrade Instruction
8-1. MCU STM32 Firmware Download by FP-004....94
8-2. MCU STM32 Firmware Download by IrDA Special Function....97

9. PC Tool Instruction
9-1. Cashfloat Setting....98
9-2. Serial Number Setting....103

10. Read Audit Data
10-1. Read Audit Data by ICT MTB....104
10-2. Read Audit Data by IrDA....105

11. Module Assembling Procedure
11-1. Upper Module Disassembling....106
11-2. Recognition Module Disassembling....107
11-3. Coin Discharge Module Disassembling....108

12. Module Exploded Views....109

1. General Information

1-1. Features

- Six tube cassette for maximum coin inventory.
- Easy to use and suitable for vending machines world wide.
- LCM display shows current coin changer status.
- Optional portable programmer to update coin changers installed on vending machines.
- Modular design for cheap and easy maintenance.
- Modular tubes for a variety of coin configuration.
- Adjustable acceptance rate calibration on site.
- High security through state of the art anti-fishing mechanism.

1.2. System Specifications

Supply Voltage	MDB: 20V DC ~ 45V DC MDB: 10V DC ~ 45V DC (CC6100SA) JPSTD: 24V DC ±10% Executive: 24V AC ±10%
Power Consumption	Standby mode: ≤3.6W Coin acceptance: ≤15.6W Coin payout: ≤15.6W (36W max. when Power is turned on initially) Battery operation (Power Saving Type) Sleep mode: ≤10uA Standby mode: ≤3.6W(wake-up mode)
Temperature Range	-15°C~+60°C
Storage Temperature	-30°C~+70°C
Temperature Change	Max. 0.2°C/ minute
Relative Humidity	Up to 85% (no condensation)

Serial Interface

MDB (connector: Minifit 6-pin)
JPSTD
Executive (connector: Molex 15-pin & 9-pin)

Peripherals MDB

MDB Bill Acceptor (for MDB & Executive interface)
MDB cashless key reader (for Executive interface only)
ICT MTB (Multi Tool Box)

Display

LCM
Menu language: English, Русский, Deutsch, Español, Français, Português, Italiano

Acceptable Coin Size

Coin diameter: 16mm~28mm
Coin Thickness: 1.2mm~3.2mm

Acceptance Speed

Approx. 1 coin / second

Coin payout

Max.6 coin types from a tube cassette

Coin diameter and thickness for dispensing depends on tube cassette type in use.

Coin Diametermm	TUBE					
	A	B	C	D	E	F
26.0~28.0	* V	V	-	-	-	-
26.0~26.5	* V	V	-	V	V	-
24.0~26.0	* V	V	V	V	V	V
22.0~24.0	* V	V	V	V	V	V
20.0~22.0	V	V	V	V	V	V
18.0~20.0	V	V	V	V	V	V
16.0~18.0	-	-	V	V	V	V

"*"Supports Escrow Function

Other Functions

Downloadable audit - EVA-DTS by IrDA or UART (for MDB & Executive)
Firmware Updates by IrDA (for MDB & Executive)
MDB-FTL (only for MDB Interface)
Customer & Product Serial Number Setting
99 coin channels
Colored diagnostic LEDs

1-3. Dimensions

Mounting position	Vertical, max. deviation: ± 3°
Mark of conformity	CE, FCC, SASO

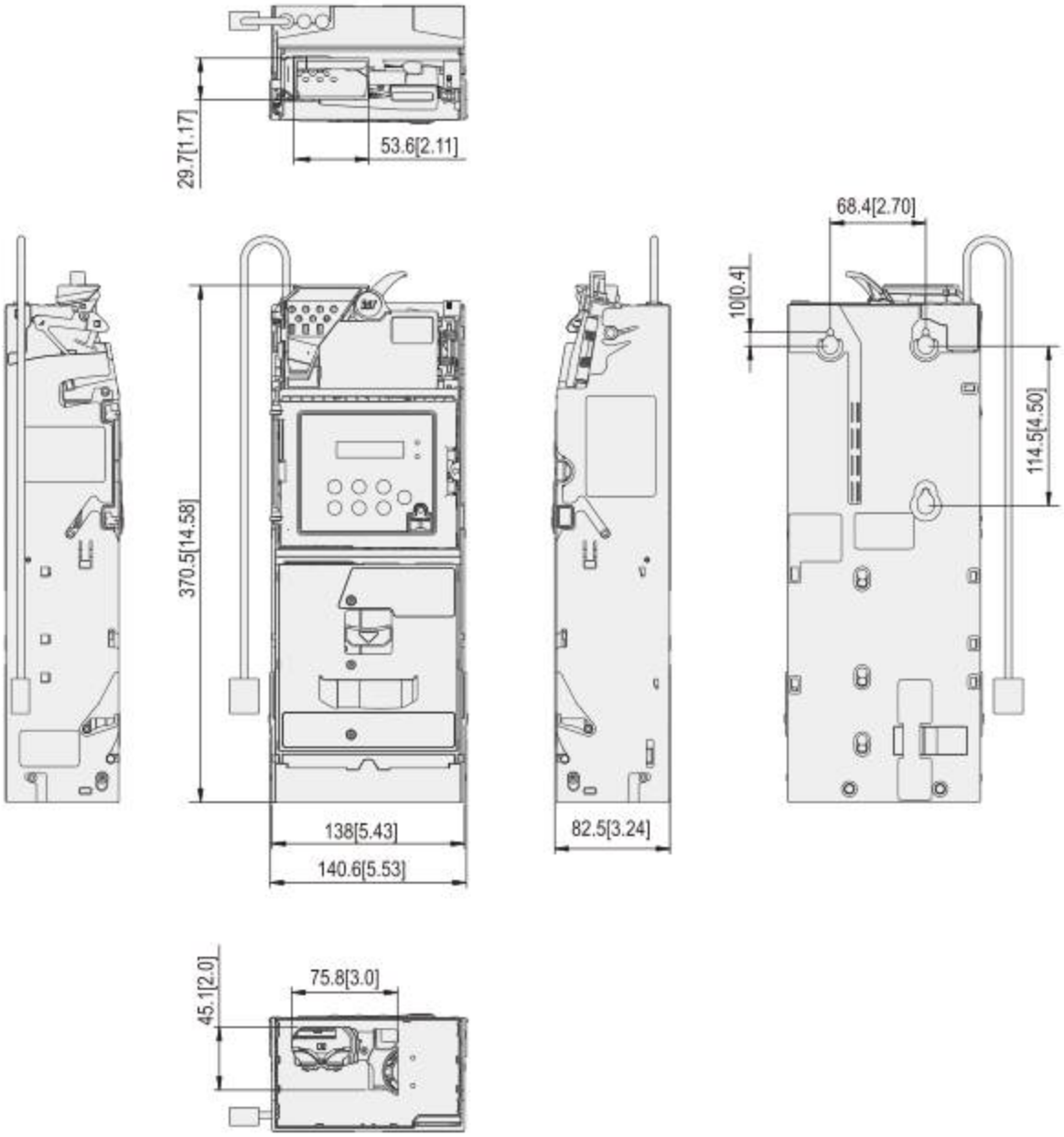

Unit : mm [inch]

1-3 FIG.01

1-4. Module Descriptions

Recognition :

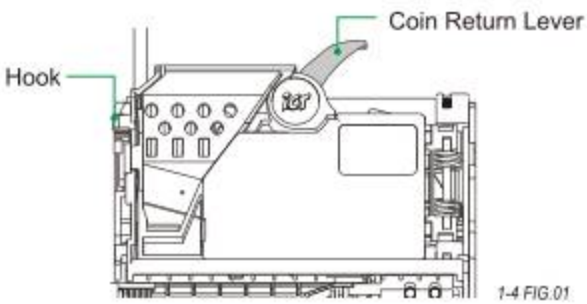

1-4 FIG.01

Coin Return Lever :
After a coin is inserted, press the coin return button to return the coin.

LCM Panel:

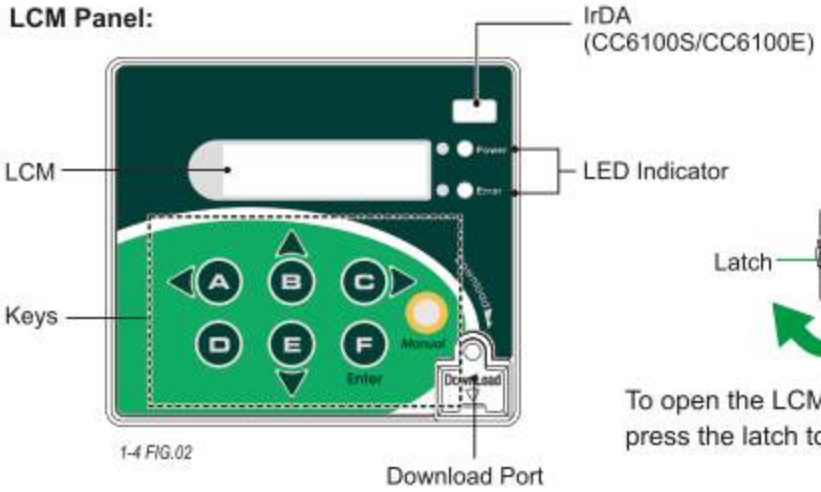

1-4 FIG.02

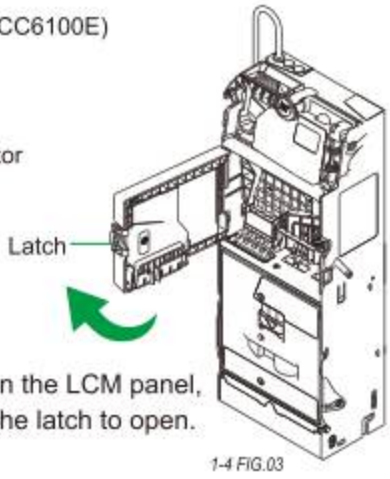

1-4 FIG.03

Coin Tubes :
Press the latch as shown below to remove the coin cassette.

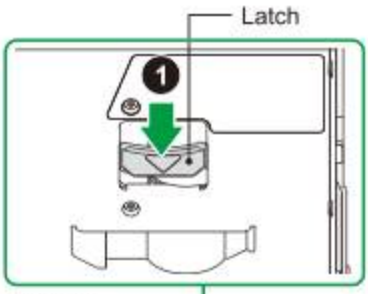

1-4 FIG.04-2

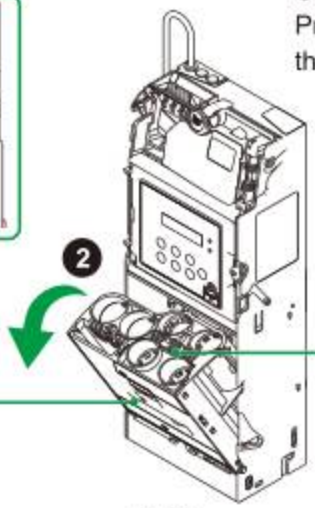

1-4 FIG.04

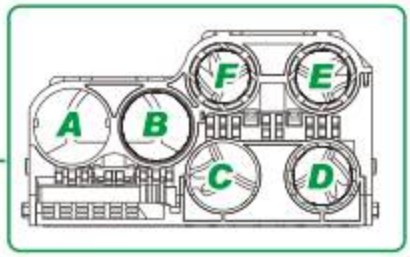

1-4 FIG.04-1

2. Installation

Attention!! Prior installation, please remove the coin changer from the carton and inspect for damages.
Attention!! Turn off VMC Power during installation – IMPORTANT!!!
Warning!! Do not plug both MDB and Executive connector to VMC board simultaneously!! It may cause damage of VMC board.

Device Mounting Instruction

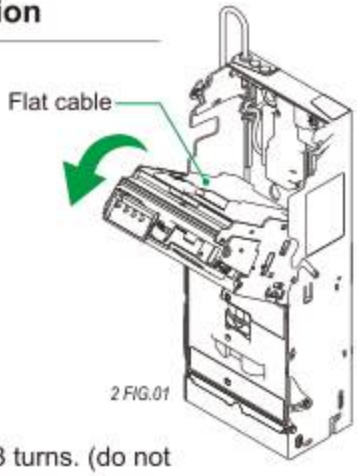

2 FIG.01

1. Press the green hook at the left side of the coin changer and tilt the upper module.

2. Unplug flat cable to separate upper module from device.

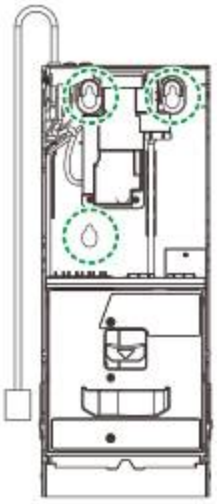

2 FIG.02

3. Loosen the 3 mounting screws 2 or 3 turns. (do not unscrew these completely)
   Lift the coin changer to mount inside the vending machine.

4. Tighten the screws and place the upper module back to the device.

5. Plug flat cable back to upper module then close the upper module until it has been firmly fixed by the green hook.
   Plug device power and communication cable to vending machine.

Tube Cassette Refill Instruction

6. Press the green cassette fixed latch to pull out the cassette at an upwardly slanted angle.

7. Refill coins into tube cassette and ensure that the coins enter the corresponding tubes and flatly placed. Then place the tube cassette back to Changer.

Note! *You may choose coin refill mode to refill coins without open tube cassette. (Refer to code 100)*

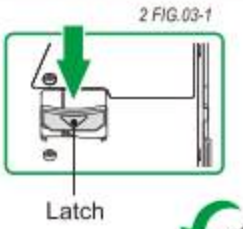

2 FIG.03-1

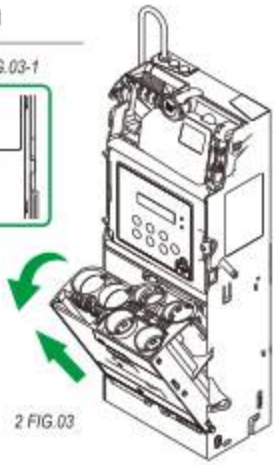

2 FIG.03

Installation Checklist

Check that there is a 3 to 5 mm gap between the coin changer return lever and the vending machine return mechanism.

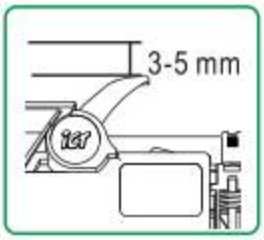

2 FIG.04

Check that when vending machine return lever has been pressed and released, the reject gate of the coin recognition module can be opened and closed properly.

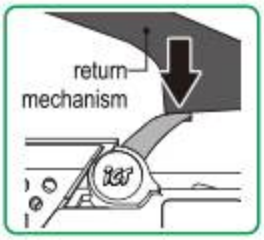

2 FIG.05

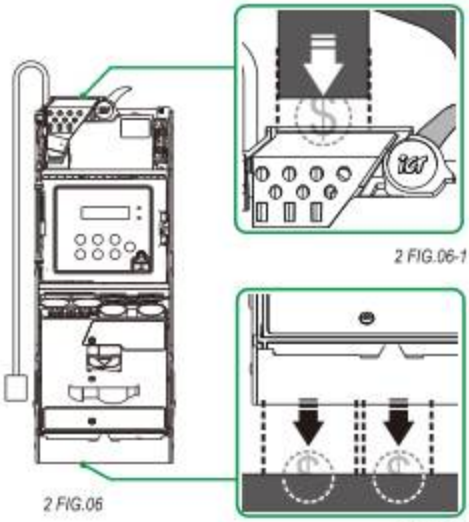

2 FIG.06-1

2 FIG.06

2 FIG.06-2

Check that the coin insertion, coin return box, and coin storage box channels of the vending machine line up with the corresponding slots of the coin changer. If the slot has not been lined up, please adjust accordingly.

Insert a coin to check whether it can pass through the coin changer successfully. Please ensure that there is no interference around the coin recognition module.

2 FIG.07

Initialization Checklist

While vending machine in an energized state, please DO NOT plug/unplug any wires on CC6100.

Please ensure that there are no interferences between the connected wires, the coin insert and return device, and the door of the automatic vending machine. After the inspections are complete, then turn on the vending machine power.

2 FIG.08

Check the amount of coins in each coin tube is above the minimum requirement level. Please refer to sticker on the tube cassette for minimum level information.
(The coin changer would not work correctly without enough coins in the coin tubes.)
After refill of tube cassette, the coin changer will detect the adequate coin quantity within a few seconds.

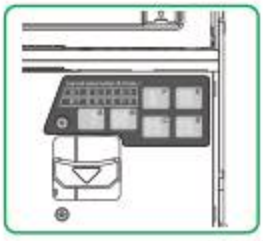

2 FIG.09

Dispense at least 1 coin from each coin tube to ensure that the dispensed coins fall into the coin return box of the vending machine.

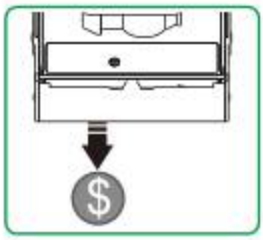

2 FIG.10

3. Operation

3-1. EZ code overview

3-1 TABLE 01

Operation functions			
Code	LCM Menu Display	Function Description	
100	Refill Coin	Coin Refill Function by Coin Insertion under Cash Flow Mode.	Accessible without password. Cash Flow Mode only.
101	Total In/Out	Check the Total Coin PayIn and PayOut Value Counter.	Accessible without password.
115	Clear Tube Count	Clear Counting Memory of All Coin Tube Inventory.	Accessible without password.
129	Language	Set language.	Accessible without password.

To access all menu functions requires password verification. Press **"D"** 3 times under main menu to open password input page. Default Password is **ABCD**. See next page for complete menu functions.

3-1 TABLE 02

Setting Functions			
Code	LCM Display	Function Description	
102	Reset Records	Clear the Total Coin PayIn and PayOut Value Record	
103	Accept/Reject Coin Switch	Set Accept or Reject to Coin Denominations	
104	Tube Open/Close Switch	Set Open or Close to Coin Tubes	
107	Configure Cash Float	Set Cash Float Configuration for Various Coin Denominations	Cash Flow Mode only
108	Activate Cash Float	Set Cash Float Type for Various Coin Denominations	Cash Flow Mode only
109	Check Current Cash Float	Check Current Cash Float of Various Coin Denominations	Cash Flow Mode only
110	Change Mgmt.	Set the Change Return Mode	
111	Idle Display	Set the Standby LCM Display Mode	
112	BA Type Setting	Set the BA Interface	
113	Default Setting	Restore to Default Factory Settings	
116	Cassette Type	Coin Tube Configuration Mode	Special Function
117	Error Info	Display Error Message Records	
118	Bill(s) per Transaction	Set the Bill Acceptance Limitation for the BA	ICT BA only
119	CashFloat Mode	Set Coin Tube Inventory Counting Mode	Cash Flow Mode only
120	Set ID	Set Customer & Machine Number	
121	Coin->CashBox Setting	Set Coin Acceptance to Cash Box Condition	
122	Expansion Escrow Setting	Set Escrow for NTD 50	Special Function, only for NTD
123	Sensor Inventory Adjustment	Detect Tube Inventory	
124	Reserved Coin	Set Reserved Coin Function	
125	Accessibility options	Set LCM accessibility under door-switch status and password security	
126	Refill Coin Inventory	Refill Coin Inventory function by inserting coins into tube cassette directly	
127	Residual Credit	Credit should remain on VMC	
128	Token Learning Mode	Token learning mode	For MDB & Executive

3-1 TABLE 02-1

Setting Functions			
Code	LCM Display	Function Description	
130	Reject Lever Setting	Set no refund after inserting payment	For MDB & Executive
131	Acceptance limit For Changer	Set Credit Acceptance Limit	Only MDB for KRW
132	Maximum for Insert Q'TY	Set limitation of coins in single transaction	Only MDB for KRW
133	Decimal and Scaling	Set Decimal point and Scaling Factor	For MDB & Executive
134	Currency Code	Setting Currency Code	
135	Error Report	Setting Error Report Function	
136	Payout Method	Setting Payout Method(Level 2)	
137	Refill Option	Setting Refill Option	
138	Channel sequence	Setting Channel sequence	
139	IDR credit	Setting Indonesia Credit	Only for Indonesia
140	EVA-DTS ID data	Setting EVA-DTS ID	
141	Bill Escrow Return	Setting Bill Escrow Return	
142	Sorting Module Testing	Setting Tube Test Mode	
143	Tube Detection(after sale)	Setting Tube Detection Function	Only for Russia
144	Overpay	Set Overpay	Only for UAH, USD, EUR
146	Resend Credit	Setting Resend Credit Function	
147	RC Settings	Setting Recycle Function	
148	VMC Reset TO VMC	Setting VMC reset Function	
149	Refill Control(Full Tube)	Setting Refill Control	
150	Low inventory report(real)	Setting Low inventory report	Only for SGD, MYR, THB
151	Secure mode for THB coin	Setting Secure mode	Only for THB
152	Fuji dispensing coin mode	Setting Fuji dispensing coin mode	Only for THB
153	RFID deduction amount	RFID deduction amount setting mode	JPSTD-TWD and THB
154	RS232 mode	RS232 mode setting	
156	Set give changes order	TWD set give changes order	Only for TWD
157	VMC support value	Set up VMC support value	
158	Set up and write each tube stock of coins	THB set up and write each tube stock of coins	Only for THB
160	JPY Amount display	JPY Amount display options	Only for JPY
161	NTD 50 special entry condition	NTD 50 special entry condition setting	Only for TWD

3-1 TABLE 03

Executive Setting Functions			
Code	LCM Display	Function Description	
200	Sell Mode	Set Single Vend or Multi Vend	Executive only
201	Price Display	Set Price Display on VMC	Executive only
202	Product Price	Set Product Price Holding by Changer	Executive only
203	Price Holding	Set Price Holding by Changer or VMC	Executive only
204	2nd Price for Cashless	Set 2nd price for cashless function on or off	Executive only
205	Enable Bill Acceptance	Set BA enable with or without e-key	Executive only
207	Residual Credit	Setup residual credit	Executive only
208	Acceptance limit For Changer	Set Credit Acceptance Limit	Executive only
209	Credit limit For Cashless	Set Credit limit for cashless	Executive only
210	Bill(s) per Transaction	Set BA limitation per transaction	Executive only
211	Exact Change Notice	Set exact change notice on display	Executive only
212	Exchange Rate	Set Exchange Rate	Executive only
213	Overpay	Set Overpay	Executive only

3-2. Dispensing Coins To Low Level

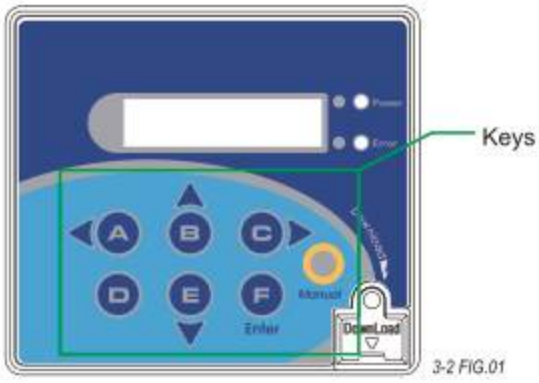

3-2 FIG.01

KEY	Function
A	Tube A, move left
B	Tube B, move upward
C	Tube C, move right
D	Tube D, back
E	Tube E, move downward
F	Tube F, enter
Manual	Enter main menu

3-2 TABLE 01

Dispensing coins to low level in all coin tubes

Press the return lever together with manual button for 3 seconds. Changer will discharge coins until all tubes reach one under minimum level. (If the minimum level has not been configured by the user, the default minimum coin level would be applied.)

Dispensing coins to low level in a specific tube

Press tube key once to dispense 1 coin from corresponding tube. Press the return lever together with the tube key for 3 seconds. Changer will discharge the selected tube until it reaches one under minimum level.

3-3. Operating Function Descriptions

3-3 TABLE 01

Code	LCM Display	Function Description	Accessibility
100	Refill Coin	Coin Refill Function by Coin Insertion under Cash Float Mode	Accessible without password. Cash Float Mode only.
Default		Definition	
N/A		Enter coin refilling mode to fill up to cash float level of each coin tube. **Note!** Cash float level depends on code 107 setting.(refer to 3-2-3)	
LCM		Description	
Refill Coin 100		Press the **"Manual"** button. Use **A / C** to scroll to EZ code 100. Press **"F"** to enter.	
Positions - A,- B,- C - D,- E,- F Require amount - 70,- 61,- 55 - 49,- 50,- 53 Number disappears when tube reach cash float level. - 40,- 32,- - 40,- ,-		LCM shows required amount of each denomination in sequence from low to high value, as left figure position A to F. In example of EU 6 denominations, position A to F represent denominations of 5cent, 10cent, 20cent, 50cent, 1€ and 2€. Insert coins until all tubes reach cash float level. The counter decreases when refilling coins and disappears when it reaches cash float level. **Caution** **Please empty all coin tubes before refilling, and do not repeatedly enter the refill mode among refilling.**	
		"Manual" to exit.	

3-3 TABLE 02

Code	LCM Display	Function Description	Accessibility
101	Total In/Out	Check the Total Coin PayIn and PayOut Value Counter	Accessible without password.
Default		Definition	
N/A		Display current bookkeeping data.	
LCM		Description	
Total In/Out 101		Press the **"Manual"** button. Use **A / C** to scroll to EZ code 101. Press **"F"** to enter.	
PayIn : $0 PayOut: $0 Difference: + $0		Use **B / E** to switch the data below: • Pay in amount • Pay out amount • Difference (IN > OUT display "+" OUT > IN display "-")	
		"Manual" to exit.	

3-3 TABLE 03

Code	LCM Display	Function Description	Accessibility
115	Clear Tube Count	Clear Counting Memory of All Coin Tube Inventory.	Accessible without password.
Default		Definition	
N/A		Clear tube inventory counter's memory.	
LCM		Description	
Clear Tube Count 115		Press the **"Manual"** button. Use **A / C** to scroll to EZ code 115. Press **"F"** to enter.	
Are You Sure?		Press **"F"** to clear memory **Caution** **Please empty the coin tubes before clear memory. Leave coins inside tube cassette may cause operational problem to changer.**	
		"Manual" to exit.	

3-3 TABLE 04

Code	LCM Display	Function Description	Accessibility
129	Language	Set language	
Default		Definition	
Depends on region		User can select menu language. English Español Deutsch Français Italiano Português Polski	
LCM		Description	
Language 129		Press the **"Manual"** button. Use **A / C** to scroll to EZ code 129. Press **"F"** to enter.	
English		LCM shows current setting. Press **B / E** button to select setting. Press **F"** button to save.	
		"Manual" to exit.	

3-4. Setting Function Descriptions

3-4 TABLE 01

Code	LCM Display	Function Description	Accessibility
102	Reset Records	Clear the Total Coin PayIn and PayOut Value Record	
Default		Definition	
N/A		Reset bookkeeping data.	
LCM		Description	
Reset Records 102		Press the **"Manual"** button. Use **A / C** to scroll to EZ code 102. Press **"F"** to enter.	
Reset Records Are You Sure? Data has been erased?		Press **"F"** to confirm and reset records. LCM shows erased message when data has been erased successfully.	
		"Manual" to exit.	

3-4 TABLE 02

Code	LCM Display	Function Description	Accessibility
103	Accept/ Reject Coin Switch	Set Accept or Reject to Coin Denominations.	
Default		Definition	
All Accept		Setup changer to accept or reject to each denomination.	
LCM		Description	
Accept/ Reject Coin Switch 103		Press the **"Manual"** button. Use **A / C** to scroll to EZ code 103. Press **"F"** to enter.	
EUR$0.05:Accept "F" to Change		Use **B / E** to switch coin values. LCM shows current setting of the denomination. Press **"F"** to change the setting. (Accept / Reject) Press **"Manuel"** to save.	
		"Manual" to exit.	

3-4 TABLE 03

Code	LCM Display	Function Description	Accessibility
104	Tube Open/ Close Switch	Set Open or Close to Coin Tubes	
Default		Definition	
All ON		On/off switch for Tube A, B, C, D, E, and F.	
LCM		Description	
Tube Open/Close Switch 104		Press the **"Manual"** button. Use **A / C** to scroll to EZ code 104. Press **"F"** to enter.	
Tube A ON "F" to Change		Use **B / E** to switch tubes. Press **"F"** to change tube setting. (Open/ Close) Press **"Manuel"** to save.	
		"Manual" to exit.	

3-4 TABLE 04

Code	LCM Display	Function Description	Accessibility
107	Configure Cash Float	Set Cash Float Configuration for Various Coin Denominations.	Cash Float Mode only
Default		Definition	
Depends on region. Maximum level of each tube.		Configure cash float level quantity of each coin value. Coin Changer can save up to 3 types of cash float setting. A coin value's maximum level depends on the maximum level of tube multiple tube number. ***Note! When coins reach defined cash float level amount, the overfloat coins will enter changer's cash box.***	
LCM		Description	
Configure Cash Float 107		Press the **"Manual"** button. Use **A / C** to scroll to EZ code 107. Press **"F"** to enter.	
Float Type A		**B / E** to switch cash float type, A, B or C. **F** to adjust selected cash float type.	
EUR$ 0.05 Level TO CB 70 Q'TY? 55 Saved		LCM shows current setting. **B / E** to switch coin values. **F** to adjust quantity. **B / E** to adjust level, +1 or -1. **A / C** to adjust level, +10 or -10. Press **"F"** to save. ***Note! If LCM does not appear saved message, means the settings were not saved, and please reconfirm and press the button "F" to save the settings.***	
Save Changes? D=NO, F=YES		Press **"Manual"** to save the coin type configuration of all coin values. Changer will inquire whether to apply the coin type configuration or not? Press **"F"** to apply immediately, or **"D"** to save the type configuration only without applying.	
		"Manual" to exit.	

3-4 TABLE 05

Code	LCM Display	Function Description	Accessibility
108	Activate Cash Float	Set Cash Float Type for Various Coin Denominations	Cash Float Mode only
Default		Definition	
		Configure Type of cash float for various coin denominations to be activated.	
LCM		Description	
Activate Cash Float 108		Press the **"Manual"** button. Use **A / C** to scroll to EZ code 108. Press **"F"** to enter.	
Float Type A Type A Activated		Use **B / E** button to scroll through types. (Type A, B or C) Press **"F"** to save.	
		"Manual" to exit.	

3-4 TABLE 06

Code	LCM Display	Function Description	Accessibility
109	Check Current Cash Float	Check current cash float setting of various coin denominations.	Cash Float Mode only
Default		Definition	
		Check current cash float setting of various coin denominations.	
LCM		Description	
Check Current Cash Float 109		Press the **"Manual"** button. Use **A / C** to scroll to EZ code 109. Press **"F"** to enter.	
$0.05 070		Use **B / E** button to scroll through each coin value's cash float configuration. After check, press **"Manual"** button to exit.	
		"Manual" to exit.	

3-4 TABLE 07

Code	LCM Display	Function Description	Accessibility
110	Change Mgmt.	Set the Change Return Mode.	
Default		Definition	
Highest Value		Setup change return by the original coin value or by the highest coin value. **Org. Coin Value:** return by original inserted sequence. **Highest Value:** return starting from highest coin value. When changer cannot return by highest value, it returns by original coin value. **chg machine:** Average Payout . Only for RUR.	
LCM		Description	
Change Mgmt. 110		Press the **"Manual"** button. Use **A / C** to scroll to EZ code 110. Press **"F"** to enter.	
Highest Value "F" to Change		Press **"F"** to change its current setting. (Highest Value/Original Coin Value) When finished, press **"Manual"** button to exit.	
		"Manual" to exit.	

3-4 TABLE 08

Code	LCM Display	Function Description	Accessibility
111	Idle Display	Set the Standby LCM Display Mode	
Default		Definition	
Coin Q'TY		Change coin changer's LCM display in standby status. **Coin Q'TY:** display coins in each tube. **Total Coin Value:** display total amount of vending.	
LCM		Description	
Idle Display 111		Press the **"Manual"** button. Use **A / C** to scroll to EZ code 111. Press **"F"** to enter.	
Coin Q'TY "F" to Change		Press **"F"** again to change display mode. (Coin Q'TY/Total Coin Value) After check, press **"Manual"** button to save.	
		"Manual" to exit.	

3-4 TABLE 09

Code	LCM Display	Function Description	Accessibility
112	BA Type Setting	Set the BA Interface.	
Default		Definition	
		Select type of connected bill acceptor. (Only work on ICT Bill Acceptor connect to Coin Changer) ***Note! This is a special function. The Coin Changer must lap joint with the ICT Bill Acceptor for this function to work.***	
LCM		Description	
BA Type Setting 112		Press the **"Manual"** button. Use **A / C** to scroll to EZ code 112. Press **"F"** to enter.	
BA: Escrow "F" to Change BA: No Escrow "F" to Change		Press **"F"** again to change BA type setting. (JPSTD/ JPSTD with escrow/ MDB/ MDB with escrow) After check, press **"Manual"** button to save.	
		"Manual" to exit.	

3-4 TABLE 10

Code	LCM Display	Function Description	Accessibility
113	Default Setting	Restore to Default Factory Settings	
Default		Definition	
N/A		Restore factory default setting. Example: cash float…etc. Cash float setting will be reset to low level of each denomination.	
LCM		Description	
Default Setting 113		Press the **"Manual"** button. Use **A / C** to scroll to EZ code 113. Press **"F"** to enter.	
Are You Sure?		Press **"F"** to restore factory setting mode. Press **"F"** again to confirm of reset to factory default, changer restart automatically. Otherwise, press **"Manual"** to cancel.	
		"Manual" to exit.	

3-4 TABLE 11

Code	LCM Display	Function Description	Accessibility
116	Cassette Type	Coin Tube Configuration Mode	Special Function
Default		Definition	
		Configure the tube coin assignment without change the firmware.	
LCM		Description	
Cassette Type 116		Press the **"Manual"** button. Use **A / C** to scroll to EZ code 116. Press **"F"** to enter.	
Tube Type 01 Configuration Finished		Use **B / E** button to scroll through different selections. (Please ask your dealer or sales for the tube assignment availability.) Press **"F"** to confirm tube coin assignment.	
Coin Float->Max D=NO , F=YES		Changer inquires automatically whether to set tube inventory (cash float) to maximum amount? Press **"D"** to remain previous cash float setting. Otherwise, press **"F"** to change cash float setting to maximum amount of the selected tube configuration.	
		"Manual" to exit.	

3-4 TABLE 12

Code	LCM Display	Function Description	Accessibility
117	Error Info	Display Error Message Records	
Default		Definition	
N/A		Display coin changer's last one error issue occurred during operation. Coin Changer keeps last record of error message even after the error has been solved.	
LCM		Description	
Error Info 117		Press the **"Manual"** button. Use **A / C** to scroll to EZ code 117. Press **"F"** to enter.	
No Error		Cion changer will display error message including **'Sorting Error'**, **'TubeSensor Error'** or **'Motor Error.'** After check, press **"Manual"** button to exit.	
		"Manual" to exit.	

3-4 TABLE 13

Code	LCM Display	Function Description	Accessibility
118	Bill(s) per Transaction	Set the Bill Acceptance Limitation for the BA.	ICT BA Only
Default		Definition	
1		Configure limited number of bills accepted per transaction. (Only works on ICT Bill Acceptor connect directly to the Coin Changer) **Configurable number of bill:** 1 to 9 ***Note! This is a special function. The Coin Changer must be equipped with the ICT Bill Acceptor for this function to work.***	
LCM		Description	
`Bill(s) per Transaction 118`		Press the **"Manual"** button. Use **A / C** to scroll to EZ code 118. Press **"F"** to enter.	

`# of Bill 1 Bill(s)`
 	
`Configuration Finished`
		Use **B / E** button to change bill limitation number.
		
		Note! The page below would appear after each save. If this page does not appear, that means the setting is not saved, please try again.
		
		After check, press **"Manual"** button to exit.	

		"Manual" to exit.	

3-4 TABLE 14

Code	LCM Display	Function Description	Accessibility
119	CashFloat Mode	Set Coin Tube Inventory Counting Mode.	

Default	Definition

Cashfloat Mode.
 	
Default amount is the maximum level of each tube.
	Select counting method of coin tube inventory.
	
	Cashfloat Mode: Changer system keeps counting coin number among tubes. Even after reboot or power reset, coin inventory data remains in memory.
	
	Sensor Mode: After reboot or power reset, coin changer detects coin inventory in tubes through low level sensor and high level sensor. Changer displays **N, L** or **H** according to coin amount:
	N - Tube empty
	L - Coins reach low level amount
	H - Coins reach high level amount
	
	`A=N , B=N , C=N`
	`D=L , E=H , F=H`
	
	`A=20 , B=22 , C=24`
	`D=12 , E=14 , F=16`
	
	Some operational functions are unavailable under sensor mode, including 100, 107, 108, 109 and 111.

LCM	Description
`CashFloat Mode` `119`	Press the **"Manual"** button. Use **A / C** to scroll to EZ code 119. Press **"F"** to enter.
`Cash Float`	Use **B / E** to select Cash Float or Sensor mode Press **"F"** to enter.

`Normal CashFloat mode`
 	
`Single tube CashFloat mode`
 	
`All tube CashFloat mode`
	Use **B / E** to Change Cash Float mode
	Press **"F"** to enter.
	
	Note! When counting method is changed to Cashfloat mode, the cashfloat setting is changed to maximum amount automatically.
	
	When finished, press **"Manual"** button to exit.

	"Manual" to exit.

3-4 TABLE 15

Code	LCM Display	Function Description	Accessibility
120	Set ID	Set Customer & Machine Number	
Default		Definition	
N/A		Configure Customer & Machine Number of Coin Changer. **Configurable Range:** Customer Number contains 16 digits and each digit applies to 0-9. Machine Number contains 12 digits and each digit applies to 0-9 or A-Z.	
LCM		Description	
Set ID 120		Press the **"Manual"** button. Use **A / C** to scroll to EZ code 120. Press **"F"** to enter.	
Set ID Machine Number Machine Number 123456789012		Use **B / E** button to select Customer Number or Machine Number to setup. Press **"F"** to set the ID.	
Set ID Customer Number Customer Number 1234567890123456 Saved		Press **"B" / "E"** to plus/minus number. Press **"A" / "C"** to shift configured digit. When finished, press **"F"** to save the ID.	
		"Manual" to exit.	

3-4 TABLE 16

Code	LCM Display	Function Description	Accessibility
121	Coin->CashBox Setting	Set Coin Acceptance to Cash Box Condition.	
Default		Definition	
Same Coin Value		Setup conditions of coin acceptance to cash box. **Same Coin Value:** When coin changer is available to refund the same denomination coin, the coin will go to cash box. Otherwise, the coin will be rejected. **Total Coin Value:** When coin changer is available to refund the total amount, accepted coins will go to cashbox. Otherwise, the coin will be rejected. **Force Receiving:** Coin will go to cashbox directly if there is no tube for its value.	
LCM		Description	
Coin->CashBox Setting 121		Press the **"Manual"** button. Use **A / C** to scroll to EZ code 121. Press **"F"** to enter.	
Coin Token		Use **B / E** to scroll to EZ code 121. Press **"F"** to enter.	
Same Coin Value "F" to Change Tatal Coin Value "F" to Change Force Receiving "F" to Change		Changer displays current setting. Press **"F"** to change setting. (Same Coin Value / Total Coin Value/ Force Receiving) After check, press **"Manual"** button to save.	
		"Manual" to exit.	

3-4 TABLE 17

Code	LCM Display	Function Description	Accessibility
122	Expansion Escrow Setting	Set Escrow for NTD 50	This function only apply to NTD Type Changer.
Default		Definition	
OFF		Setup condition of 50NTD into escrow or cash box. **Escrow OFF:** 50NTD coin goes into cash box when changer can return from cassette; otherwise 50NTD coin is returned. **Escrow ON:** no limit: 1st and 2nd coins of NTD 50 will go to escrow, 3rd and the rest will go to cashbox. Limit(2): 1st and 2nd coins of NTD 50 will go to escrow, 3rd and the rest will be rejected.	
LCM		Description	
Expansion Escrow Setting 122		Press the **"Manual"** button. Use **A / C** to scroll to EZ code 122. Press **"F"** to enter.	
Expansion Escrow ON Expansion Escrow OFF Save		Changer displays current escrow setting. Press **B / E** to adjust Escrow ON / OFF Choose OFF, press **"F"** to save. Choose ON, then press **"F"** to select **"no limit"** or **"limit(2)"**, then press **"F"** to save.	
Escrow ON Limit(2) Escrow ON NO Limit Save		Use **B / E** to Select Escrow ON Limit(2) / Escrow ON No Limit. Press**"F"** to enter. When finished, press **"Manual"** button to exit.	
		"Manual" to exit.	

3-4 TABLE 18

Code	LCM Display	Function Description	Accessibility
123	Sensor Inventory Adjustment	Detect Tube Inventory	
Default		Definition	
N/A		Detect tube inventory and overwrite tube count data.	
LCM		Description	
Sensor Inventory Adjustment 123		Press the **"Manual"** button. Use **A / C** to scroll to EZ code 123. Press **"F"** to enter.	
Scan Inventory? D=NO, F=YES Finished		Press **"D"** to cancel. Press **"F"** to read the coin inventory and save the inventory amount. The changer displays message as left when tube count has been overwritten successfully, then back to main configuration screen automatically.	
		"Manual" to exit.	

3-4 TABLE 19

Code	LCM Display	Function Description	Accessibility
124	Reserved Coin	Set Reserved Coin Function	
Default		Definition	
ON		Setup reserved coin function to ON or OFF. **Reserved Coin ON:** Changer will not pay out to last coin among operation, specific number of coins will reserve inside tubes, around 4 coins. The reserved coin number depends on different region. **Reserved Coin OFF:** Changer pays out to last coin in tubes.	
LCM		Description	
Reserved Coin 124		Press the **"Manual"** button. Use **A / C** to scroll to EZ code 124. Press **"F"** to enter.	
ON "F" to Change		Changer displays current setting. Press **"F"** to change reserved coin setting to ON or OFF. After check, press **"Manual"** button to save.	
		"Manual" to exit.	

3-4 TABLE 20

Code	LCM Display	Function Description	Accessibility
125	Accessibility options	Set LCM accessibility under door-switch status and password security	
Default		Definition	
Door-OFF Password-ON		Setup LCM accessibility under door-switch status and setup password security. **Door-ON:** LCM inaccessible under door closing **Door-OFF:** LCM accessible under door closing **PW-ON:** Require password to access all LCM function **PW-OFF:** Require no password to access all LCM function	
LCM		Description	
`Accessibility options 125`		Press the **"Manual"** button. Use **A / C** to scroll to EZ code 125. Press **"F"** to enter.	

`Door: OFF`
`Password: ON`
 	
`Door: OFF`
`Password: OFF`
 	
`Door: ON`
`Password: OFF`
 	
`Door: ON`
`Password: ON`
 	
`Saved`
		Press **"B" / "E"** button to select setting.
		Press **"F"** to save the setting.
		The changer display saved message when setting has been overwritten successfully.	

		"Manual" to exit.	

3-4 TABLE 21

Code	LCM Display	Function Description	Accessibility
126	Refill Coin Inventory.	Refill Coin Inventory by inserting coins into tube cassette directly	
Default		Definition	
N/A		Allow user to refill coins by inserting coins into tube cassette directly. The tube refill procedure is select code 126, check refill amount on display, take out cassette, refill coins into cassette, put cassette back then press Enter to finish refill procedure. Please notice that changer do not count refilled coin amount, user need to put exact coin amount as requirement. The required coin amount may vary according to code 108 setting.	
LCM		Description	
Refill Coin Inventory 126		Press the **"Manual"** button. Use **A / C** to scroll to EZ code 126. Press **"F"** to enter.	
A=XX, B=XX, C=XX D=XX, E=XX, F=XX Overwrite Finished		LCM displays required refill amount of each tube. Make sure cassette has enough coins as required. Press **"F"** to save. The changer display finished message when setting has been overwritten successfully.	
		"Manual" to exit.	

3-4 TABLE 22

Code	LCM Display	Function Description	Accessibility
127	Residual Credit	Credit should retain on VMC	
Default		Definition	
		Can use this option to adjust if the remain credit should show on VMC. **Finished + VMC#:** Coin changer can refund corresponding funds, report to VMC process is done after refunding. **UnFinished+ Actual#:** Report to VMC change is not enough to refund, VMC will hold on busy status. **Finished_ Actual#:** When funds is not enough for vending, report to VMC process is done after product offer.	
LCM		Description	
Residual Credit 127		Press the **"Manual"** button. Use **A / C** to scroll to EZ code 127. Press **"F"** to enter.	
Finished+VMC# UnFinish+Actual# Finish+Actual#		Press **B / E** button to select setting. Changer displays current setting. Press **"F"** button to save.	
		"Manual" to exit.	

3-4 TABLE 23

Code	LCM Display	Function Description	Accessibility
128	Token Learning Mode	Token learning mode	CC6100M, CC6100E
Default		Definition	
		User can teach Changer various token through LCM. (Token A or B) Each token requires at least 3 for learning.	
LCM		Description	
Token Learning Mode 128		Press the **"Manual"** button. Use **A / C** to scroll to EZ code 128. Press **"F"** to enter.	
Token Type A		Use **B / E** button to select token. Press **"F"** to configure token, to learn or to delete.	
Token Value $0.01 Learn Mode: 00 Insert Token Success Failure		To learn token, use **B / E** button to select token learn function. Press **"F"** to learn. Follow display instruction to insert token. 20 tokens are required for learning. After check, press **"Manual"** button to exit. LCM shows success message when token learning is successful. Otherwise, LCM shows failure when token learning is fail.	
Token A Delete Are you sure? D=NO, F=YES Token Erased		To delete token, use **B / E** button to select token delete function. Press **"F"** to delete. LCM display erased message when setting has been erased successfully.	
		"Manual" to exit.	

3-4 TABLE 24

Code	LCM Display	Function Description	Accessibility
129	Language	Set language	
Default		Definition	
Depends on region		User can select menu language. English Español Deutsch Français Italiano Português Polski	
LCM		Description	
Language 129		Press the **"Manual"** button. Use **A / C** to scroll to EZ code 129. Press **"F"** to enter.	
English		LCM shows current setting. Press **B / E** button to select setting. Press **F**" button to save.	
		"Manual" to exit.	

3-4 TABLE 25

Code	LCM Display	Function Description	Accessibility
130	Reject Lever Setting	Set no refund after inserting payment	CC6100M, CC6100E
Default		Definition	
ON OFF(INR only)		User can set vending machine to no refund after inserting payment. **ON:** set vending machine to refund by pressing reject button **OFF:** set vending machine to no refund.	
LCM		Description	
Reject Lever Setting 130		Press the **"Manual"** button. Use **A / C** to scroll to EZ code 130. Press **"F"** to enter.	
ON "F" to Change		Changer displays current setting. Press **"F"** to change setting. (ON or OFF) When finished, press **"Manual"** button to exit.	
		"Manual" to exit.	

3-4 TABLE 26

Code	LCM Display	Function Description	Accessibility
131	Acceptance limit For Changer	Set Credit Acceptance Limit	CC6100M KRW Only
Default		Definition	
0		When the total credit of coins and bills exceeds the acceptance limit (over the limitation amount), the Coin Changer & Bill Accepter will be disabled. And the LCM of Coin Changer will show **"Acceptance Limit Reached!"** (When this option setting is "0", there is no limit.)	
LCM		Description	
Acceptance Limit For Changer 131		Press the **"Manual"** button. Use **A / C** to scroll to EZ code 131. Press **"F"** to enter.	
Acceptance Limit $000000		LCM displays current setting. Press **"B" / "E"** to plus/minus number. Press **"A" / "C"** to shift configured digit. When finished, press **"F"** to save.	
		"Manual" to exit.	

3-4 TABLE 27

Code	LCM Display	Function Description	Accessibility
132	Maximum for Insert Q'TY	Set limitation of inserted coins in single transaction.	CC6100M KRW Only
Default		Definition	
30		Use can define a limitation number of coins during a single vend. When inserted coins exceed the number of limitation, the exceeded coins will be returned.	
LCM		Description	
Maximum for Insert Q'TY 132		Press the **"Manual"** button. Use **A / C** to scroll to EZ code 132. Press **"F"** to enter.	
Acceptance Limit PCS		LCM displays current setting. Press **"B" / "E"** to plus/minus number. Press **"A" / "C"** to shift configured digit. When finished, press **"Manual"** button to save and exit.	
		"Manual" to exit.	

3-4 TABLE 28

Code	LCM Display	Function Description	Accessibility
133	Decimal and Scaling	Set Decimal point and Scaling Factor	CC6100M, CC6100E

Default	Definition
Decimal 0 Scaling 1 Different country product have different setting	Setup the decimal point and scaling factor of vending values to VMC. To prevent the counting value error, please make sure the value can be divided to integer under the decimal and scaling setting. **Decimal Point:** 0-2 **Scaling Factor:** 1-255

LCM	Description
`Decimal and Scaling 133`	Press the **"Manual"** button. Use **A / C** to scroll to EZ code 133. Press **"F"** to enter.

`Decimal`
 	
`Decimal Place: 0`
	To setup Decimal, use **B / E** button to select Decimal.
	Press **"F"** to set.
	
	LCM displays current setting.
	Press **"B" / "E"** to plus/minus number.
	
	When finished, press **"F"** to save.

`Scaling`
 	
`Scaling Factor : 001`
	To setup Decimal, use **B / E** button to select Decimal.
	Press **"F"** to set.
	
	LCM display setting:
	Press **A / C** to choose decimal places
	Press **B / E** to add/minus number.
	
	When finished, press **"F"** to save.

	"Manual" to exit.

3-4 TABLE 29

Code	LCM Display	Function Description	Accessibility
134	Currency Code	Setting Currency Code	
Default		Definition	
Base on MDB protocol		Currency code Base on MDB protocol	
LCM		Description	
Currency Code 134		Press the **"Manual"** button. Use **A / C** to scroll to EZ code 134. Press **"F"** to enter.	
Currency Code 1810 Saved		Press **"A" / "C"** to shift configured digit. Press **"B" / "E"** to plus/minus number. Press **"F"** to save.	
		"Manual" to exit.	

3-4 TABLE 30

Code	LCM Display	Function Description	Accessibility
135	Error Report	Setting Error Report Function	
Default		Definition	
OFF		**ON:** Report error message to VMC **OFF:** Not report error message to VMC	
LCM		Description	
Error Report To VMC 135		Press the **"Manual"** button. Use **A / C** to scroll to EZ code 135. Press **"F"** to enter.	
Error Report:OFF "F" to Change Error Report:ON "F" to Change		Press **"F"** to Change Error report function. When finished, press **"Manual"** button to save and exit.	
		"Manual" to exit.	

3-4 TABLE 31

Code	LCM Display	Function Description	Accessibility
136	Payout Method	Setting Payout Method(Level 2)	
Default		Definition	
Combination		Set CC6100 payout method when it receives a level 2 DISPENSE command. **Combination:** When the coin value which VMC assign to payout is empty, CC6100 will payout other value to complete payout command. **Regular:** When the coin value which VMC assign to payout is empty, CC6100 will do nothing.	
LCM		Description	
Payout Method 136		Press the **"Manual"** button. Use **A / C** to scroll to EZ code 136. Press **"F"** to enter.	
Combination "F" to Change Regular "F" to Change		Press **"F"** to Change Payout Method. When finished, press **"Manual"** button to save and exit.	
		"Manual" to exit.	

3-4 TABLE 32

Code	LCM Display	Function Description	Accessibility
137	Refill Option	Setting Refill Coin mode	
Default		Definition	
Fill Up Single		Setting Refill coin mode **Fill Up Single:** Normal Refill mode **Reserved First**: Each tube must be refill coins to 4 coins.	
LCM		Description	
Refill Option 137		Press the **"Manual"** button. Use **A / C** to scroll to EZ code 137. Press **"F"** to enter.	
Fill Up Single "F" to Change Reserved First "F" to Change		Press **"F"** to Change Setting (Fill up Single or Reserved First)	
		"Manual" to exit.	

3-4 TABLE 33

Code	LCM Display	Function Description	Accessibility
138	Channel sequence	Setting Channel sequence	
Default		Definition	
After Originals		To set up CC Coin Value channel sequence. **After Originals:** Set coin value channel sequence from the country of build-in first , and token after. **Small to Large:** Set coin value channel sequence from small value coins to high value coin.	
LCM		Description	
Channel sequence 138		Press the **"Manual"** button. Use **A / C** to scroll to EZ code 138. Press **"F"** to enter.	
After Originals "F" to Change Small to Large "F" to Change		Press **"F"** to Change Setting (After Originals or Small to Large)	
		"Manual" to exit.	

3-4 TABLE 34

Code	LCM Display	Function Description	Accessibility
139	IDR Credit	Setting Indonesia Credit	Only for Indonesia
Default		Definition	
1000		Set up IDR VMC to report coin value should show 1000 or 1.	
LCM		Description	
Credit base Option		Press the **"Manual"** button. Use **A / C** to scroll to EZ code 139. Press **"F"** to enter.	
VMC display 1 "F" to Change VMC display 1000 "F" to Change		Press **"B" / "E"** to change setting(1or 1000) Press **"F"** to save.	
		"Manual" to exit.	

3-4 TABLE 35

Code	LCM Display	Function Description	Accessibility
140	EVA-DTS ID data	Setting EVA-DTS ID	
Default		Definition	
ON		Set CC to report EVADTS Serial number with full 16 digits or not ON : 16 Digits 0000000123456789 OFF : do not show the full 16 digits. _ _ _ _ _ _ _ _123456789	
LCM		Description	
EVA-DTS ID data padding 140		Press the **"Manual"** button. Use **A / C** to scroll to EZ code 140. Press **"F"** to enter.	
ON "F" to Change OFF "F" to Change		Press **"F"** to Change Setting (ON or OFF)	
		"Manual" to exit.	

3-4 TABLE 36

Code	LCM Display	Function Description	Accessibility
141	Bill Escrow Return	Setting Bill Escrow Return	Only for TWD
Default		Definition	
Bill Return ON		**Bill Return ON:** When BA is having error, BA will return holding banknotes (under Escrow function on). **Bill Return OFF:** When BA is having error, BA will not return holding banknotes and to reset the BA the user needs to go on side to remove the holding banknotes.	
LCM		Description	
Bill Escrow Return 141		Press the **"Manual"** button. Use **A / C** to scroll to EZ code 141. Press **"F"** to enter.	
Bill Return:ON "F" to Change Bill Return:OFF "F" to Change		Press **"F"** to Change Setting (ON or OFF)	
		"Manual" to exit.	

3-4 TABLE 37

Code	LCM Display	Function Description	Accessibility
142	Tube Test Mode	Setting Tube Test Mode	
Default		Definition	
		Set to test A to F tube and coin path.	
LCM		Description	
Sorting Module Testing 142		Press the **"Manual"** button. Use **A / C** to scroll to EZ code 142. Press **"F"** to enter.	
Tube Select Tube A Tube Select Cash Box		Use **B / E** to Select Tube-A ~ Tube F or Cashbox Press **"F"** to enter.	
Coin insert Tube A 00 Coin insert CashBox 00		Insert coin to test	
		"Manual" to exit.	

3-4 TABLE 38

Code	LCM Display	Function Description	Accessibility
143	Tube Detection (after sale)	Setting Tube Detection Function	Only for Russia
Default		Definition	
ON		To set up if the system needs to active RUB tube detection function after a transaction.	
LCM		Description	
Tube Detection (after sale) 143		Press the **"Manual"** button. Use **A / C** to scroll to EZ code 143. Press **"F"** to enter.	
ON "F" to Change OFF "F" to Change		Press **"F"** to Change Setting (ON or OFF)	
		"Manual" to exit.	

3-4 TABLE 39

Code	LCM Display	Function Description	Accessibility
144	Overpay	Set Overpay	Only for UAH, USD, EUR
Default		Definition	
OFF		The different interfaces of the channel corresponding to the currency value will judge whether the currency value should be returned according to the difference in the set amount. Overpay OFF function OFF, the coin changer will not accept 0.2 (EUR) when coin changer runs out of 0.05 and 0.10 (EUR) with this function off. According to each country coin value, the coin changer will still accept 0.2 (EUR) when the coin changer has set ON overpay function.	
LCM		Description	
Overpay 144		Press the **"Manual"** button. Use **A / C** to scroll to EZ code 144. Press **"F"** to enter.	
Overpay OFF Press'F' to Save Value: 0.05 Press'F' to Save		To setup Overpay, use **B / E** button to select. Press **"F"** to set. Press **"Manual"** to save.	
		"Manual" to exit.	

3-4 TABLE 40

Code	LCM Display	Function Description	Accessibility
146	Resend Credit	Setting Resend Credit Function	
Default		Definition	
Disable		Under MDB protocol, after sending value to VMC and VMC does not response ACK the coin changer will keep sending credit to VMC until coin changer receive ACK response from VMC. **Disable:** Turn off this function the coin changer will only send credit once. **Enable:** Turn on this function the coin changer will keep sending credit until VMC response ACK.	
LCM		Description	
Resend Credit 146		Press the **"Manual"** button. Use **A / C** to scroll to EZ code 146. Press **"F"** to enter.	
Disable "F" to Change Enable "F" to Change		Press **"F"** to select. Press **"Manual"** to set.	
		"Manual" to exit.	

3-4 TABLE 41

Code	LCM Display	Function Description	Accessibility
147	RC Settings	Setting Recycle Function	
Default		Definition	
Disable		The user can control RC function under VCCS protocol. **Disable:** Turn off this function the coin changer will not keep receiving any value. **Enable:** If coin changer does not receive any ACK from VMC the coin changer will keep sending received credit to VMC.	
LCM		Description	
RC Settings 147		Press the **"Manual"** button. Use **A / C** to scroll to EZ code 147. Press **"F"** to enter.	
		Click enter to enter select page and there are 6 options that user can set coin changer with. **Load Banknote to Recycle:** RC refill function, RC can receive credit as refill value. **Unload Banknote to Stack:** Temperately insert the banknote that is holding in the RC into the cashbox and user can set up the cashbox inserting banknotes quantity. **Banknote Dispensing:** Temperately return banknotes that is holding in the RC to entrance and user can set up the return banknotes quantity. **Recycle Bill Value Setting:** Set RC receivable banknotes value, the value can be changed according to different country configuration. **Recycle Full Setting:** Set the maximum RC holding banknotes quantity. **Reset User Setting:** Reset RC function to default setting.	
Function Disable		If BA does not support RC function, the screen will show as following picture. Press **"Manual"** to Exit.	
		"Manual" to exit.	

3-4 TABLE 42

Code	LCM Display	Function Description	Accessibility
148	VMC Reset to VMC	Setting VMC Reset Function	
Default		Definition	
Reset Status OFF		Under VCCS protocol, the coin changer under dispensing mode the coin changer can still receive reset command from VMC. **Reset Status OFF:** The CC will reset after receiving reset command from VMC when CC does not complete dispensing coin. **Reset Status ON:** even when coin changer is doing coin dispensing.	
LCM		Description	
VMC Reset To VMC 148		Press the **"Manual"** button. Use **A / C** to scroll to EZ code 148. Press **"F"** to enter.	
Reset Status:OFF "F" to Change Reset Status:ON " F" to Change		Press **"F"** to select. Press **"Manual"** to set.	
		"Manual" to exit.	

3-4 TABLE 43

Code	LCM Display	Function Description	Accessibility
149	Refill Control (Full Tube)	Setting Refill Control	
Default		Definition	
Cashbox		Under MDB protocol refill coin mode, after fill up the coin the user can select a value of coin that it needs go to coin box or return box.	
LCM		Description	
Refill Control (Full Tube) 149		Press the **"Manual"** button. Use **A / C** to scroll to EZ code 149. Press **"F"** to enter.	
Go To Cash Box "F" to Change Go To Reject "F" to Change		Press **"F"** to select. Press **"Manual"** to set.	
		"Manual" to exit.	

3-4 TABLE 44

Code	LCM Display	Function Description	Accessibility
150	Low inventory Report(real)	Setting Low inventory Report	Only for SGD, MYR, THB
Default		Definition	
ON		Under MDB protocol for SGD, MYR and THB function. When the coin in the tube is between 5-9 coins the user can choose to response real quantity or 10 coins in tube to VMC.	
LCM		Description	
Low inventory Report(real) 150		Press the **"Manual"** button. Use **A / C** to scroll to EZ code 150. Press **"F"** to enter.	
ON "F" to Change OFF "F" to Change		Press **"F"** to select. Press **"Manual"** to set.	
		"Manual" to exit.	

3-4 TABLE 45

Code	LCM Display	Function Description	Accessibility
151	Secure mode for THB coin.	Setting Secure mode	Only for THB
Default		Definition	
Normal mode		Reflection to different coin value setting when coin changer encounters E24 error code. As follow functions. **Normal mode:** coin values setting can be in two different groups and situation, 1 and 2 THB group and 5 and 10 THB group. The system detect once entry error for 5 and 10 THB it will show E24 Error code and coin changer will stop working. The system detect once entry error for 1 and 2 THB it will show E35 fishing error code to notice the operator this problem has occurred. The conditions to cancel E35 fishing error code will be 1: accumulate 5 transactions with entry coin into tube included 1 or 2 THB. 2: under standby mode every 20 minutes the coin changer will reduce one accumulate transactions then as above condition did not happen and the detect coin entry fail again the system will auto show E24 error code so coin changer will back to operational mode. **Security mode:** coin value in 3 groups 1, 2, 5 and 10 THB. 1 THB: happen once entry coin detect failed (will show entry coin value), before release security condition (accumulate 5 transactions include 1 THB entry coin tube) then reappear the failed the system will block accept of 1 THB into tube for 10 minutes and will show E36 locked error code on the screen. The customer has to wait for 10 minutes before customer can use 1 THB. 2 THB: happen once entry coin detect failed (will show entry coin value), before release security condition (accumulate 5 transactions include 1 THB entry coin tube) then reappear the failed the system will block accept of 2 THB into tube for 10 minutes and will show E36 locked error code on the screen. The customer has to wait for 10 minutes before customer can use 2 THB. 5 and 10 THB: happen once entry coin detect failed the screen will show E37 error code (will not show any credit), if the next coin still show entry error the screen will show E24 error code and it will not accept any other coins. If the first detection failed, but on the second entry of coin enter into the tube the screen will show E37 error code and coin changer will keep receiving coins. E24, E35, E37 can be release by opening LCM bezel to erase error code. E24, E35, E36 and E37 can be release by option 151 to erase error code.	
LCM		Description	
Coin Tube Security 151		Press the **"Manual"** button. Use **A / C** to scroll to EZ code 151. Press **"F"** to enter.	
Normal Mode "F" to Change Security Mode "F" to Change		Press **"F"** to select. Press **"Manual"** to set.	
		"Manual" to exit.	

3-4 TABLE 46

Code	LCM Display	Function Description	Accessibility
152	Fuji dispensing coin mode	Setting Fuji dispensing coin mode .	Only for THB, IDR
Default		Definition	
OFF		Support THB Fuji VMC under L3 dispensing commend, the coin changer will delay the response to VMC by 1 second after receiving dispense commend.	
LCM		Description	
Fuji payout Mode 152		Press the **"Manual"** button. Use **A / C** to scroll to EZ code 152. Press **"F"** to enter.	
OFF "F" to Change ON "F" to Change		Press **"F"** to select. Press **"Manual"** to set.	
		"Manual" to exit.	

3-4 TABLE 47

Code	LCM Display	Function Description	Accessibility
153	RFID deduction amount	RFID deduction amount setting mode.	JPSTD Only
Default		Definition	
		Currently only support JPSTDS-TWD and THB and the reader can set up the amount when it detected RFID.	
LCM		Description	
MAX.Recharge Credit 153		Press the Manual button. Use **A / C** to scroll to EZ code 153. Press **"F"** to enter.	
Value : 020		Click **B or E** button to set up the deduction amount and Click enter button to complete the setting.	
		"Manual" to exit.	

3-4 TABLE 48

Code	LCM Display	Function Description	Accessibility
154	RS232 mode	RS232 mode setting.	
Default		Definition	
		The CC setting function can be operated with the RS232 tool. For the RS232 function, please refer to the document "MDB to RS232 VMC TOOL Description". **Remark :** MDB FTL download need to use under normal MDB protocol and can not be used under RS232 mode.	
LCM		Description	
RS232 Mode 154		Press the **"Manual"** button. Use **A / C** to scroll to EZ code 154. Press **"F"** to enter.	
OFF "F" to Change ON "F" to Change		Click **ENTER** button to enter the select option mode, click enter again to select ON or OFF. Click **Manual** button back to select option page 154.	
		"Manual" to exit.	

3-4 TABLE 49

Code	LCM Display	Function Description	Accessibility
156	Set give changes order	TWD set give changes order	Only for TWD
Default		Definition	
		According to Taiwan vending request start from lower value coin.	
LCM		Description	
Coin Payout Sequence 156		Press the **"Manual"** button. Use **A / C** to scroll to EZ code 156. Press **"F"** to enter.	
Big to Small "F" to Change Small to Big "F" to Change		Click **ENTER** button to enter the select option mode, click enter again to select mode. Click **Manual** button back to select option page 156.	
		"Manual" to exit.	

3-4 TABLE 50

Code	LCM Display	Function Description	Accessibility
157	VMC support value	Set up VMC support value.	
Default		Definition	
		For some VMC that coins value are fixed and cannot change, in this situation. You can set the specific coins value OFF from code 103 and should select the corresponding tubes to OFF from code 104, and select to ON from code 157. With setting code103, 104 and 157 at the same time to set up VMC support value.	
LCM		Description	
Channel Shift 157		Press the **"Manual"** button. Use **A / C** to scroll to EZ code 157. Press **"F"** to enter.	
OFF "F" to Change ON "F" to Change		Click **ENTER** button to enter the select option mode, click enter again to select mode. Click **Manual** button back to select option page 157.	
		"Manual" to exit.	

3-4 TABLE 51

Code	LCM Display	Function Description	Accessibility
158	Set up and write each tube stock of coins	THB to set up and write each tube stock of coins.	Only for THB

Default	Definition
	Set the number of each coin tube and can be written directly. 1. If there is no change to the set value, it is the factory default value. 2. The setting of the coin control stock will change according to the different upper limit of the coin control configuration. 3. The maximum number of coins in each tube is calculated based on the thickness of the coin.

LCM	Description
Flash cashflow 158	Press the **"Manual"** button. Use **A / C** to scroll to EZ code 158. Press **"F"** to enter.
Flash Set Amount	Click **B or E** button can select mode.
Save Tube A	Under Flash mode click Enter button to write down the coin quantity. Press **Enter** in the Set Amount mode to enter the currency selection page, as shown below. Press the **B or E** button to select the coin tube you want to set.
Tube A 52 Save	After selecting the coin tube, press **Enter** to enter the inventory setting page. On this page, press the **B or E** key to adjust the value to 1, and press the **A or C** key to adjust the value to 10. The page is shown below. After confirming, press **Enter** to save the settings. After saving, the page will automatically return to the page of selecting coin tube management to perform other coin tube management settings.
	Set completed return to coin tube management settings Click **Manual** button back to select option page 158.
	"Manual" to exit.

3-4 TABLE 52

Code	LCM Display	Function Description	Accessibility
160	JPY Amount display	JPY Amount display options	Only for JPY
Default		Definition	
		Can control JPY VMC to report coin value to show decimal point in 0 or 2 digits.	
LCM		Description	
TCN Display Mode 160		Press the **"Manual"** button. Use **A / C** to scroll to EZ code 160. Press **"F"** to enter.	
OFF "F" to Change ON "F" to Change		Press **"F"** to select OFF or ON. OFF: JPY 10 shows as 1, and the rest of values are so on. ON : JPY 10 shows 0.01, and the rest of values are so on.	
		"Manual" to exit.	

3-4 TABLE 53

Code	LCM Display	Function Description	Accessibility
161	NTD 50 special entry condition	NTD 50 special entry condition setting	Only for TWD
Default		Definition	
		ON : Need 9 pcs of NTD 10 in tube, otherwise NTD 50 will be rejected. OFF : No need to be NTD 10 in tube, NTD 50 can be accepted.	
LCM		Description	
TWD 50 Coin PayIn Set 161		Press the **"Manual"** button. Use **A / C** to scroll to EZ code 161. Press **"F"** to enter.	
OFF "F" to Change ON "F" to Change		Click **ENTER** button to enter the select option mode, click enter again to select mode. Click **Manual** button back to select option page 161.	
		"Manual" to exit.	

3-4 TABLE 54

Code	LCM Display	Function Description	Accessibility
162		Setting of equal coin withdrawal conditions	Only for RUR
Default		Definition	
		Set average output limit of 1 dollar, when the 1 dollar tube number is lower than setting average, the coin changer will not dispense 1 dollar. If the change cannot be found, the currency will be withdrawn according to the best solution (large to small), if set Setting 0 means that the average withdrawal process will not exclude 1 dollar.	
LCM		Description	
RUR Coin 1 Set 162		Press the **"Manual"** button. Use **A / C** to scroll to EZ code 162. Press **"F"** to enter.	
Set quantity 000		Click **ENTER** button to enter selection page then click B or E button to set up the coin quantity. Click **Manual** button back to select option page 162.	
		"Manual" to exit.	

3-5. Executive Setting Function Descriptions

3-5 TABLE 01

Code	LCM Display	Function Description	Accessibility
200	Sell Mode	Set Single Vend or Multi Vend	Executive only
Default		Definition	
Single Vend		Setup condition of vending criteria to single vending mode or multi vending mode. **Single Vend:** After a transaction is made, vending machine refunds and finish transaction. **Multi Vend:** After a transaction is made, vending machine does not refund change and the transaction stays open unless return lever is triggered.	
LCM		Description	
Sell Mode 200		Press the **"Manual"** button. Use **A / C** to scroll to EZ code 200. Press **"F"** to enter.	
MODE: Single "F" to Change		Changer displays current setting. Press **"F"** to change setting. (Single or Multi) After check, press **"Manual"** button to exit.	
		"Manual" to exit.	

3-5 TABLE 02

Code	LCM Display	Function Description	Accessibility
201	Price Display		Executive only
Default		Definition	
Disable		Setup whether to display product price on VMC monitor or not. **Disable:** The product price will not be displayed. **Enable:** Display product price.	
LCM		Description	
Price Display 201		Press the **"Manual"** button. Use **A / C** to scroll to EZ code 201. Press **"F"** to enter.	
MODE: Single "F" to Change		LCM displays current setting. Press **"F"** to change setting. (Disable or Enable) After check, press **"Manual"**button to exit.	
		"Manual" to exit.	

3-5 TABLE 03

Code	LCM Display	Function Description	Accessibility
202	Product Price	Set Product Price Holding by Changer	Executive only
Default		Definition	
N/A		Setup product price. The price is applied only when it is hold by changer. To set price holding mode, please refer to code 203.	
LCM		Description	
Product Price 202		Press the **"Manual"** button. Use **A / C** to scroll to EZ code 202. Press **"F"** to enter.	
Channel: NO.01 "F" to Change		Use **B / E** button to select channel. Press **"F"** to configure channel.	
Set Price $00.00 Set Price Finished		LCM shows current price. Press **"B" / "E"** tto plus/minus number. Press **"A" / "C"** to shift configured digit. When finished, press **"F"** to save.	
Cash cashless $00.00 $00.00 Set Price Finished		When code 204 is set to Enable, the 2nd bonus price in the right side can be set. LCM shows current price. Press **"B" / "E"** to plus/minus number. Press **"A" / "C"** to shift configured digit. When finished, press **"F"** to save.	
		"Manual" to exit.	

3-5 TABLE 04

Code	LCM Display	Function Description	Accessibility
203	Price Holding	Set Price Holding by Changer or VMC	Executive only
Default		Definition	
VMC		Setup whether the product price is held by Changer or VMC.	
LCM		Description	
Price Holding 203		Press the **"Manual"** button. Use **A / C** to scroll to EZ code 203. Press **"F"** to enter.	
MODE: VMC "F" to Change		LCM displays current setting. Press **"F"** to change setting. (VMC or Changer) After check, press **"Manual"** button to exit.	
		"Manual" to exit.	

3-5 TABLE 05

Code	LCM Display	Function Description	Accessibility
204	2nd Price For Cashless	Set 2nd price for cashless function on or off	Executive only
Default		Definition	
Disable		Setup whether the 2nd price for cashless function to enable or disable.	
LCM		Description	
2nd Price For Cashless 204		Press the **"Manual"** button. Use **A / C** to scroll to EZ code 204. Press **"F"** to enter.	
Enable "F" to Change		LCM displays current setting. Press **"F"** to change setting. (Enable or Disable) After check, press **"Manual"** button to exit.	
		"Manual" to exit.	

3-5 TABLE 06

Code	LCM Display	Function Description	Accessibility
205	Enable Bill Acceptor	Set BA enable with or without e-key	Executive only
Default		Definition	
Always		Setup Bill Acceptor enable with or without e-key connection. **Always:** BA always enable, requires no e-key connection. **If card present:** BA only enable under e-key connection.	
LCM		Description	
`Enable Bill Acceptor 205`		Press the **"Manual"** button. Use **A / C** to scroll to EZ code 205. Press **"F"** to enter.	
`Always "F" to Change` `If card Present "F" to Change`		LCM displays current setting. Press **"F"** to change setting. (Always or If card present) When finished, press **"Manual"** button to exit.	
		"Manual" to exit.	

3-5 TABLE 07

Code	LCM Display	Function Description	Accessibility
207	Residual Credit	Setup residual credit	Executive only
Default		Definition	
Not Delete		When coin changer cannot refund the change totally, the remaining balance will be reported to VMC or delete it.	
LCM		Description	
`Residual Credit 207`		Press the **"Manual"** button. Use **A / C** to scroll to EZ code 207. Press **"F"** to enter.	
`Delete "F" to Change`		LCM displays current setting. Press **"F"** to change setting. (Delete or Not Delete) When finished, press **"Manual"** button to exit.	
		"Manual" to exit.	

3-5 TABLE 08

Code	LCM Display	Function Description	Accessibility
208	Acceptance Limit For Changer	Set Credit Acceptance Limit	Executive only
Default		Definition	
30		When the total credit of coins and bills exceeds the acceptance limit (over the limitation amount), the Coin Changer & Bill Accepter will be disabled. And the LCM of Coin Changer will show " **Acceptance Limit Reached!**" (When this option setting is **"0"**, there is no limit.)	
LCM		Description	
Acceptance Limit For Changer 208		Press the **"Manual"** button. Use **A / C** to scroll to EZ code 208. Press **"F"** to enter.	
Acceptance Limit $030.0 Acceptance Limit Saved		LCM displays current setting. Press **"B" / "E"** to plus/minus number. Press **"A" / "C"** to shift configured digit. When finished, press **"F"** to save.	
		"Manual" to exit.	

3-5 TABLE 09

Code	LCM Display	Function Description	Accessibility
209	Credit Limit For Cashless	Set Credit limit for cashless	Executive only
Default		Definition	
30		When the top-up credit of cashless device (E-key) exceeds the credit limit, the Coin Changer & Bill Accepter will be disabled. And the LCM of Coin Changer will show **"Cashless Limit Reached!".** (When this option setting is "0", there is no limit.)	
LCM		Description	
Credit Limit For Cashless 209		Press the **"Manual"** button. Use **A / C** to scroll to EZ code 209. Press **"F"** to enter.	
Cashless Limit $030.00 Cashless Limit Saved		LCM displays current setting. Press **"B" / "E"** to plus/minus number. Press **"A" / "C"** to shift configured digit. When finished, press **"F"** to save.	
		"Manual" to exit.	

3-5 TABLE 10

Code	LCM Display	Function Description	Accessibility
210	Bill(s) per Transaction	Set BA limitation per transaction	Executive only
Default		Definition	
1		Set the maximum quantity for inserting banknotes to BA per transaction, quantity from 1 to 9. **Note :** It's available when the price holding is on coin changer.	
LCM		Description	
Bill(s) per Transaction 210		Press the **"Manual"** button. Use **A / C** to scroll to EZ code 210. Press **"F"** to enter.	
# of Bill 1 Bill(s) Configuration Finished		Use **B / E** button to change bill limitation number. ***Note! The page below would appear after each save. If this page does not appear, that means the settings were not saved, and please retry setting.*** When finished, press **"F"** to save.	
		"Manual" to exit.	

3-5 TABLE 11

Code	LCM Display	Function Description	Accessibility
211	Exact Change Notice	Set exact change notice on display	Executive only
Default		Definition	
Not Active		**Active:** VMC will show "No change" . When menu 124 setting is ON and the first three minimum denomination are under 10 coins. When menu 124 setting is OFF and the first three minimum denomination are under 6 coins. **Not Active:** VMC will not show "No change".	
LCM		Description	
Exact Change Notice 211		Press the **"Manual"** button. Use **A / C** to scroll to EZ code 211. Press **"F"** to enter.	
Not Active "F" to Change		LCM displays current setting. Press **"F"** to change setting. (Active or Not Active) When finished, press **"Manual"** button to exit.	
		"Manual" to exit.	

3-5 TABLE 12

Code	LCM Display	Function Description	Accessibility
212	Exchange Rate	Setting Exchange Rate	Executive only
Default		Definition	
		Convert the second currency to main currency in the dual-currency system.	
LCM		Description	
Exchange Rate 212		Press the **"Manual"** button. Use **A / C** to scroll to EZ code 212. Press **"F"** to enter.	
EUR €10.05 =001 CZK		Press the **Enter** Button to the menu screen, Use **B / E** Button to select the currency to be modified. Press the **"F"** key to enter the currency value to set the conversion rate, press the **"B" / "E"** key to set the amount . Pressing the **"Manual"** key after setting is complete and you can jump back to the C step and press the **"Manual"** key again. CC6100 will reboot to initialize the set exchange rate. When finished, press **"Manual"** button to exit.	
		"Manual" to exit.	

3-5 TABLE 13

Code	LCM Display	Function Description	Accessibility
213	Overpay	The maximum client loss amount can be set through LCM	Executive only
Default		Definition	
		Cleared Unlimited: When coin changer cannot refund the balance totally, the transaction is still allowed and the balance will be deleted after transaction. **Cleared Value setting:** The transaction will be cancelled when balance is more than the setting amount. The transaction will be allowed when balance is less than setting amount and the balance will be deleted after transaction. **Retained Unlimited:** When coin changer cannot refund the balance totally, the transaction is still allowed and the balance will be reported to VMC. **Retained Value setting:** The transaction will be cancelled when balance is more than the setting amount. The transaction will be allowed when balance is less than setting amount and the balance will be reported to VMC after transaction. **Disable:** Allow transactions only when there are enough coins in coin changer.	
LCM		Description	
Overpay 213		Press the **"Manual"** button. Use **A / C** to scroll to EZ code 213 Press **"F"** to enter.	
Overpay Cleared Overpay Retained Overpay Disable		Click **ENTER** button to enter select page than click **B or E** button to set on or off. When select Disabled, click **F** button to save and move back to C process and complete the setting than click **Manual** button to move back to LCM 213 page. When select Cleared or Retained, click **F** button to enter selection Unlimited or Value setting page. When selected Unlimited, click **F** button and saved the setting then move back to F step. Click **manual** button to move back to LCM 213 page. When selected Value setting click **F** button and to set up the value then click **A or C** button to adjust position, then click **B or E** button to set the amount. After complete the setting press **F** button to save then move back to **E** step then click **manual** button to move back to LCM 213 page.	
Overpay Value $000.00			
		"Manual" to exit.	

3-5 TABLE 14

Code	LCM Display	Function Description	Accessibility
214	DCM5 Setting	DCM5 Age verification function settings	Executive only
Default		Definition	
		Set the age verification of DCM5 (ICT DCM5 must be connected). **Disable:** No age verification. **Enable :** Allow to do transactions after age verified by DCM5.	
LCM		Description	
DCM5 Setting 214		Press the **"Manual"** button. Use **A / C** to scroll to EZ code 214. Press **"F"** to enter.	
Disable Enable		Use **B / E** button to change bill limitation number.	
DCM5_Age_Setting 18		When selected Enable please set up the age. Click **B or E** button to set the age. Settable age 16, 18, 20. Completed set up please click **F** button to save.	
		"Manual" to exit.	

3-5 TABLE 14

Code	LCM Display	Function Description	Accessibility
215	Periodic Accept	Regular data return function	Executive only
Default		Definition	
		This feature can be turned on or off through LCM settings.	
LCM		Description	
Periodic Accept Data 215		Press the **"Manual"** button. Use **A / C** to scroll to EZ code 215. Press **"F"** to enter.	
ON "F" to Change OFF "F" to Change		Click **ENTER** button to enter option page then click **F** button to select ON or OFF.	
		"Manual" to exit.	

3-6. DIP Switch Setting

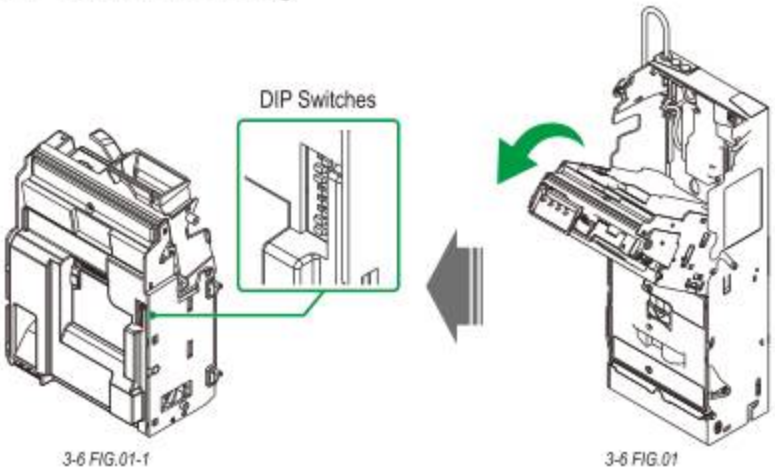

3-6 FIG.01-1

3-6 FIG.01

3-6-1. DIP Switch Setting for JPSTD, MDB

3-6-1 TABLE 01

FUNCTION	SW1	SW2	SW3	SW4	SW5	SW6	SW7	SW8
High anti-counterfeiting (1st coin value)	ON							
High acceptance (1st coin value)	OFF							
High anti-counterfeiting (2nd coin value)		ON						
High acceptance (2nd coin value)		OFF						
High anti-counterfeiting (3rd coin value)			ON					
High acceptance (3rd coin value)			OFF					
High anti-counterfeiting (4th coin value)				ON				
High acceptance (4th coin value)				OFF				
Reserved					ON			
Reserved					OFF			
Reserved						ON		
Reserved						OFF		
Calibration Mode							ON	
Reserved							OFF	
Reserved								ON
Reserved								OFF

Note:

- SW3-ON, High anti-counterfeiting: CNY $1, RUB $5, TWD $50
- SW4-ON, High anti-counterfeiting: RUB $10
- Acceptance rate setting, SW1 to SW4, is limited to some regions or denominations. Please contact your local dealer for further information.

3-6-2. DIP Switch Setting for EXECUTIVE

3-6-2 TABLE 01

FUNCTION	SW1	SW2	SW3	SW4	SW5	SW6	SW7	SW8
High anti-counterfeiting (1st coin value)	ON							
High acceptance (1st coin value)	OFF							
High anti-counterfeiting (2nd coin value)		ON						
High acceptance (2nd coin value)		OFF						
High anti-counterfeiting (3rd coin value)			ON					
High acceptance (3rd coin value)			OFF					
High anti-counterfeiting (4th coin value)				ON				
High acceptance (4th coin value)				OFF				
Reserved(MDB)					ON			
Reserved(Executive)					OFF			
Reserved						ON		
Reserved						OFF		
Calibration Mode							ON	
Reserved							OFF	
Reserved								ON
Reserved								OFF

Note:

- SW3-ON, High anti-counterfeiting: CNY $1, RUB $5, TWD $50
- SW4-ON, High anti-counterfeiting: RUB $10
- Acceptance rate setting, SW1 to SW4, is limited to some regions or denominations. Please contact your local dealer for further information.

3-6-3. DIP Switch Setting for CC6100SA

3-6-3 TABLE 01

FUNCTION	SW1	SW2	SW3	SW4	SW5	SW6	SW7	SW8
High anti-counterfeiting (1st coin value)	ON							
High acceptance (1st coin value)	OFF							
High anti-counterfeiting (2nd coin value)		ON						
High acceptance (2nd coin value)		OFF						
High anti-counterfeiting (3rd coin value)			ON					
High acceptance (3rd coin value)			OFF					
High anti-counterfeiting (4th coin value)				ON				
High acceptance (4th coin value)				OFF				
Calibration Mode					ON			
Reserved					OFF			
Reserved						ON		
Reserved						OFF		
Reserved							ON	
Reserved							OFF	
Reserved (Turn off the sleep mode)								ON
Reserved (Turn on the sleep mode)								OFF

Note:

- SW3-ON, High anti-counterfeiting: CNY $1, RUB $5, TWD $50
- SW4-ON, High anti-counterfeiting: RUB $10
- Acceptance rate setting, SW1 to SW4, is limited to some regions or denominations. Please contact your local dealer for further information.

4. Harness Application

4-1. List of Main Wire Harness

4-1 TABLE 01

Interface	Used Voltage	Usage	Harness	Page
JPSTD	24V DC	Power & *Data Comm. 55cm	WEL-RCC24	64
JPSTD	24V DC	Power & *Data Comm. 75cm	WEL-RCC50	65
JPSTD	24V DC	Power & *Data Comm. 95cm	WEL-RCC49	64
MDB	20~45V DC	Power & *Data Comm. 57cm	WEL-RCC23	67
MDB	20~45V DC	Power & *Data Comm. 77cm	WEL-RCC51	68
MDB	20~45V DC	Power & *Data Comm. 97cm	WEL-RCC47	67
Power Saving	10~45V DC	Power & *Data Comm. 97cm	3-CA-RCC71-01	-
MDB & MDB Peripheral	24V AC	Power & *Data Comm. 97cm	WEL-RCC72	71
Executive	24V AC	Power & *Data Comm. 97cm	WEL-RCC54	70
-	-	Download Box Cable (Optional)	WEL-RCC42	72

*Data Comm. : Data Communication.

Warning

Do not plug both MDB and Executive connecter to VMC board simultaneously!! It may cause damage of VMC board.

4-2. List of Wire Harness for ICT Bill Acceptor

4-2 TABLE 01

Interface	ICT Bill Acceptor	Harness	Page
JPSTD	NV Series	WEL-RCC48	66
	MDB Bill Acceptor	WEL-RCC48 + WEL-RCC46	66
MDB	NV Series	WEL-RCC67 + WEL-RCC68	69
	MDB Bill Acceptor	WEL-RCC67	69
Executive	MDB Bill Acceptor	WEL-RCC72	71

Please refer to Chapter 3-2 < Set the BA Interface > for setting instruction.

4-3. Wire Harness Pin Assignment for JPSTD interface

< Main Wire Harness >

4-3 FIG.01

Interface	Used Voltage	Usage
JPSTD	24V DC	Power & *Data Comm.

WEL-RCC24

PIN 5- RED.....+24VDC
PIN 4- ORANGE.....GND
PIN 3- GREEN.....VCCS_SYNC
PIN 2- BLUE.....VCCS_RX
PIN 1- YELLOW.....VCCS_TX

JST XLR-08V BACK VIEW

PIN 1- RED.....+24VDC
PIN 4- GREEN.....VCCS_SYNC
PIN 5- YELLOW.....VCCS_TX
PIN 6- BLUE.....VCCS_RX
PIN 8- ORANGE.....GND

4-3 FIG.02

Interface	Used Voltage	Usage
JPSTD	24V DC	Power & *Data Comm.

WEL-RCC49

PIN 5- RED.....+24VDC
PIN 4- ORANGE.....GND
PIN 3- GREEN.....VCCS_SYNC
PIN 2- BLUE.....VCCS_RX
PIN 1- YELLOW.....VCCS_TX

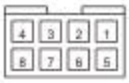

JST XLR-08V BACK VIEW

PIN 1- RED.....+24VDC
PIN 4- GREEN.....VCCS_SYNC
PIN 5- YELLOW.....VCCS_TX
PIN 6- BLUE.....VCCS_RX
PIN 8- ORANGE.....GND

4-3 FIG.03

Interface	Used Voltage	Usage
JPSTD	24V DC	Power & *Data Comm.

WEL-RCC50

PIN 5- RED.....+24VDC
PIN 4- ORANGE.....GND
PIN 3- GREEN.....VCCS_SYNC
PIN 2- BLUE.....VCCS_RX
PIN 1- YELLOW.....VCCS_TX

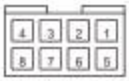

JST XLR-08V BACK VIEW

PIN 1- RED.....+24VDC
PIN 4- GREEN.....VCCS_SYNC
PIN 5- YELLOW.....VCCS_TX
PIN 6- BLUE.....VCCS_RX
PIN 8- ORANGE.....GND

< JPSTD wire harness for ICT Bill Acceptor >

4-3 FIG.04

Interface	ICT Bill Acceptor	Harness
JPSTD	NV Series	WEL-RCC48
	MDB Bill Acceptor	WEL-RCC48+WEL-RCC46

WEL-RCC48

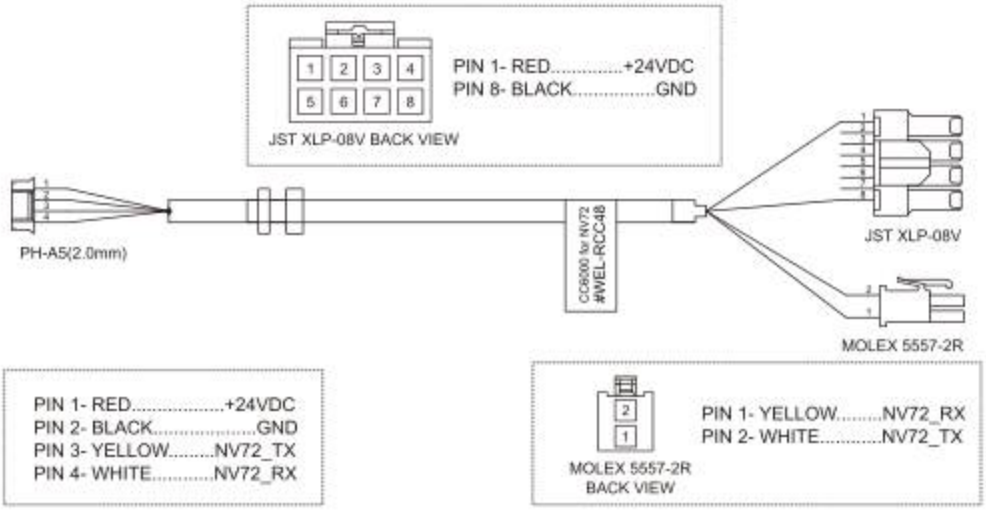

WEL-RCC46

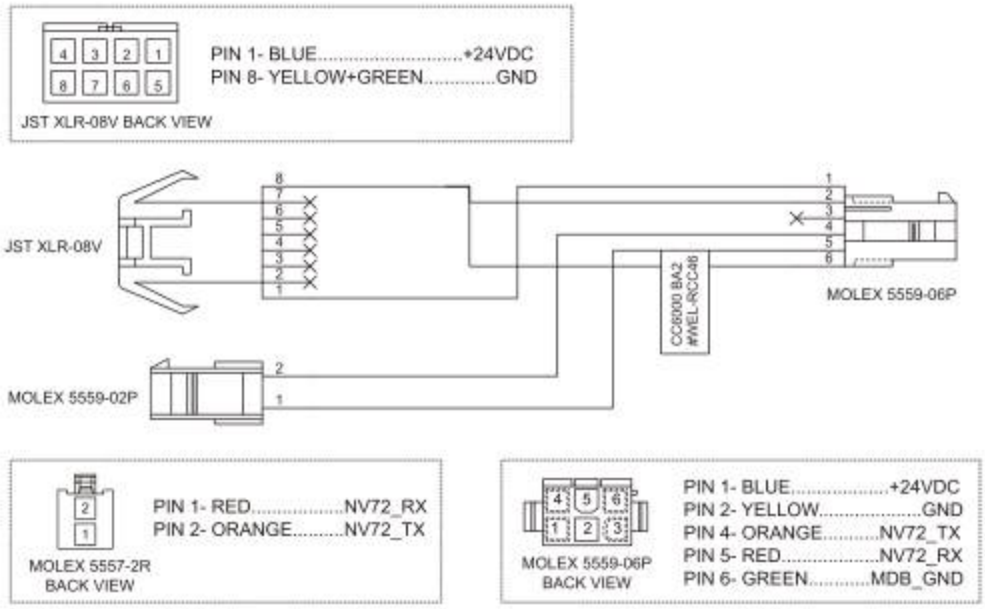

4-4. Wire Harness Pin Assignment for MDB interface

< Main Wire Harness >

4-4 FIG.01

Interface	Used Voltage	Usage
MDB	20-45V DC	Power & *Data Comm.

WEL-RCC23

PIN 1- BLUE.....+34VDC
PIN 2- YELLOW.....GND
PIN 3- PURPLE.....MDB_WAKEUP
PIN 4- BROWN.....MDB_RX
PIN 5- RED.....MDB_TX
PIN 6- GREEN.....MDB_GND

MOLEX 5557-6R
BACK VIEW

PIN 1- BLUE.....+34VDC
PIN 2- YELLOW.....GND
PIN 3- PURPLE.....MDB_WAKEUP
PIN 4- BROWN.....MDB_RX
PIN 5- RED.....MDB_TX
PIN 6- GREEN.....MDB_GND

4-4 FIG.02

Interface	Used Voltage	Usage
MDB	20-45V DC	Power & *Data Comm.

WEL-RCC47

PIN 1- BLUE.....+34VDC
PIN 2- YELLOW.....GND
PIN 3- PURPLE.....MDB_WAKEUP
PIN 4- BROWN.....MDB_RX
PIN 5- RED.....MDB_TX
PIN 6- GREEN.....MDB_GND

MOLEX 5557-6R
BACK VIEW

PIN 1- BLUE.....+34VDC
PIN 2- YELLOW.....GND
PIN 3- PURPLE.....MDB_WAKEUP
PIN 4- BROWN.....MDB_RX
PIN 5- RED.....MDB_TX
PIN 6- GREEN.....MDB_GND

4-4 FIG.03

Interface	Used Voltage	Usage
MDB	20-45V DC	Power & *Data Comm.

WEL-RCC51

PIN 1- BLUE.....+34VDC
PIN 2- YELLOW.....GND
PIN 3- PURPLE.....MDB_WAKEUP
PIN 4- BROWN.....MDB_RX
PIN 5- RED.....MDB_TX
PIN 6- GREEN.....MDB_GND

MOLEX 5557-6R
BACK VIEW

PIN 1- BLUE.....+34VDC
PIN 2- YELLOW.....GND
PIN 3- PURPLE.....MDB_WAKEUP
PIN 4- BROWN.....MDB_RX
PIN 5- RED.....MDB_TX
PIN 6- GREEN.....MDB_GND

< MDB wire harness for ICT Bill Acceptor >

4-4 FIG.04

Interface	ICT Bill Acceptor	Harness
MDB	NV Series	WEL-RCC67+WEL-RCC68
	MDB Bill Acceptor	WEL-RCC67

WEL-RCC67

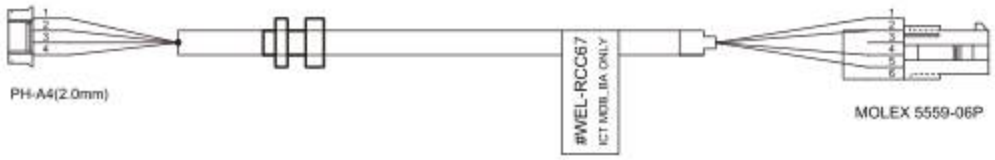

PIN 1- RED.....+24VDC
PIN 2- BLACK.....GND
PIN 3- YELLOW.....NV72_TX
PIN 4- WHITE.....NV72_RX

MOLEX 5559-06P
BACK VIEW

PIN 1- RED.....+24VDC
PIN 2- BLACK.....GND
PIN 4- YELLOW.....NV72_TX
PIN 5- WHITE.....NV72_RX
PIN 6- GREEN.....MDB_GND

WEL-RCC68

PIN 1- BLUE.....+24VDC
PIN 8- YELLOW+GREEN.....GND

JST XLR-08V BACK VIEW

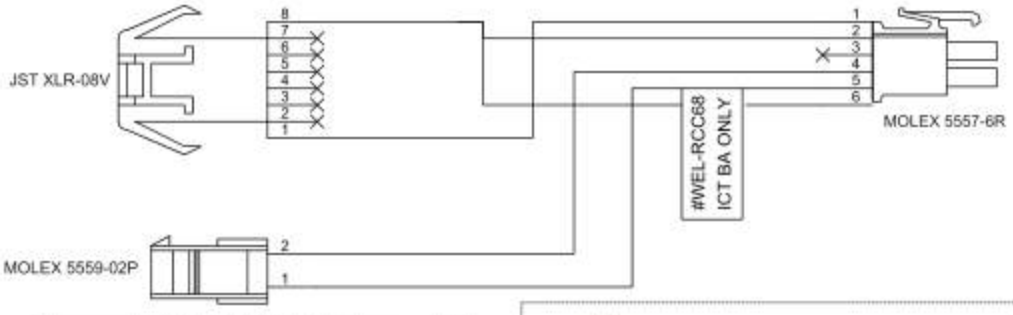

MOLEX 5557-2R
BACK VIEW

PIN 1- RED.....NV72_RX
PIN 2- ORANGE.....NV72_TX

MOLEX 5557-6R
BACK VIEW

PIN 1- BLUE.....+24VDC
PIN 2- YELLOW.....GND
PIN 4- ORANGE.....NV72_TX
PIN 5- RED.....NV72_RX
PIN 6- GREEN.....MDB_GND

4-5. Wire Harness Pin Assignment for Executive & MDB Interface

4-5 FIG.01

Interface	Used Voltage	Harness
Executive	24V AC	WEL-RCC54
Interface	Peripheral	Harness
Executive	MDB Peripheral	WEL-RCC72(MDB Peripheral)

WEL-RCC54

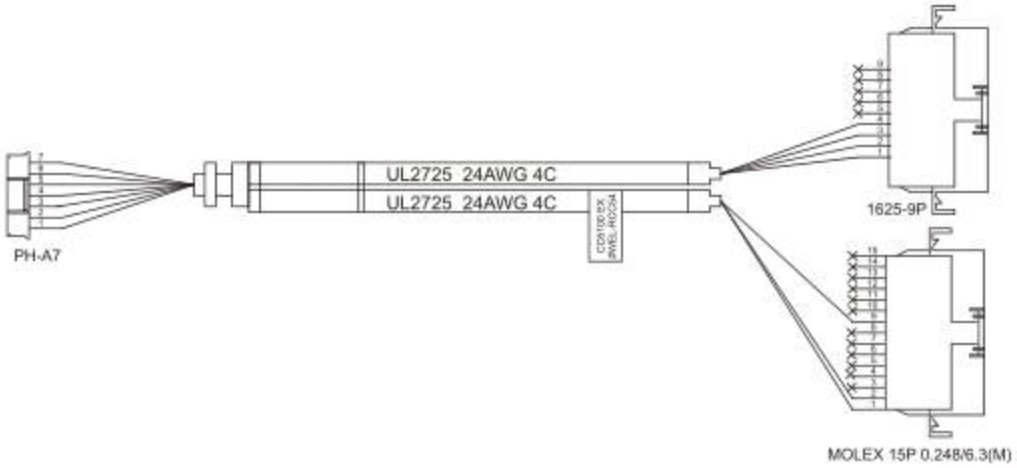

PIN 1- BROWN.....NC
PIN 2- GREEN.....RX-
PIN 3- RED.....RX+
PIN 4- YELLOW.....TX-
PIN 5- BLUE.....TX+
PIN 6- GREEN.....GND
PIN 7- RED.....VIN

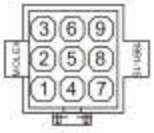

1625-9P

PIN 1- BLUE.....TX+
PIN 2- GREEN.....RX-
PIN 3- RED.....RX+
PIN 4- YELLOW.....TX-

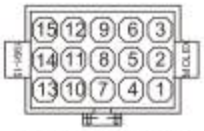

MOLEX 15P 0.248/6.3(M)
BACK

PIN 1- RED.....VIN
PIN 2- GREEN.....GND
PIN 3- BROWN.....NC

4-5 FIG.02

Interface	Used Voltage	Harness
MDB	24V AC	WEL-RCC72(MDB)
Interface	Peripheral	Harness
MDB	MDB Peripheral	WEL-RCC72(MDB Peripheral)

WEL-RCC72

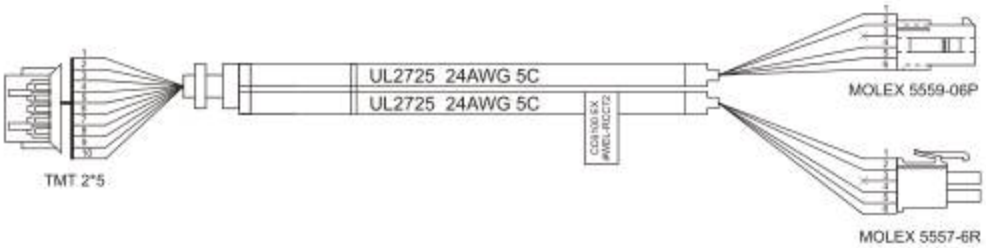

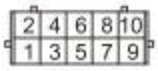

TMT 2*5 BACK VIEW

PIN 1- BLUE.....BA_VIN
PIN 2- YELLOW.....BA_GND
PIN 3- BROWN.....BA_RX
PIN 4- RED.....BA_TX
PIN 5- BROWN.....VMC_RX
PIN 6- RED.....VMC_TX
PIN 7- GREEN.....MDB_GND
PIN 8- GREEN.....MDB_GND
PIN 9- BLUE.....MDB_VIN
PIN 10- YELLOW.....MDB_COM

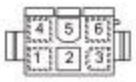

MOLEX 5559-06P
BACK VIEW

PIN 1- BLUE.....VIN
PIN 2- YELLOW.....GND
PIN 4- BROWN.....BA_RX
PIN 5- RED.....BA_TX
PIN 6- GREEN.....MDB_GND

MOLEX 5557-6R
BACK VIEW

PIN 1- BLUE.....VIN
PIN 2- YELLOW.....GND
PIN 4- BROWN.....VMC_RX
PIN 5- RED.....VMC_TX
PIN 6- GREEN.....MDB_GND

Warning

Do not plug both MDB and Executive connector to VMC board simultaneously!! It may cause damage of VMC board.

4-6. Wire Harness Pin Assignment for Download Box

4-6 FIG.01

Interface	Used Voltage	Usage
-	-	Download Box Cable

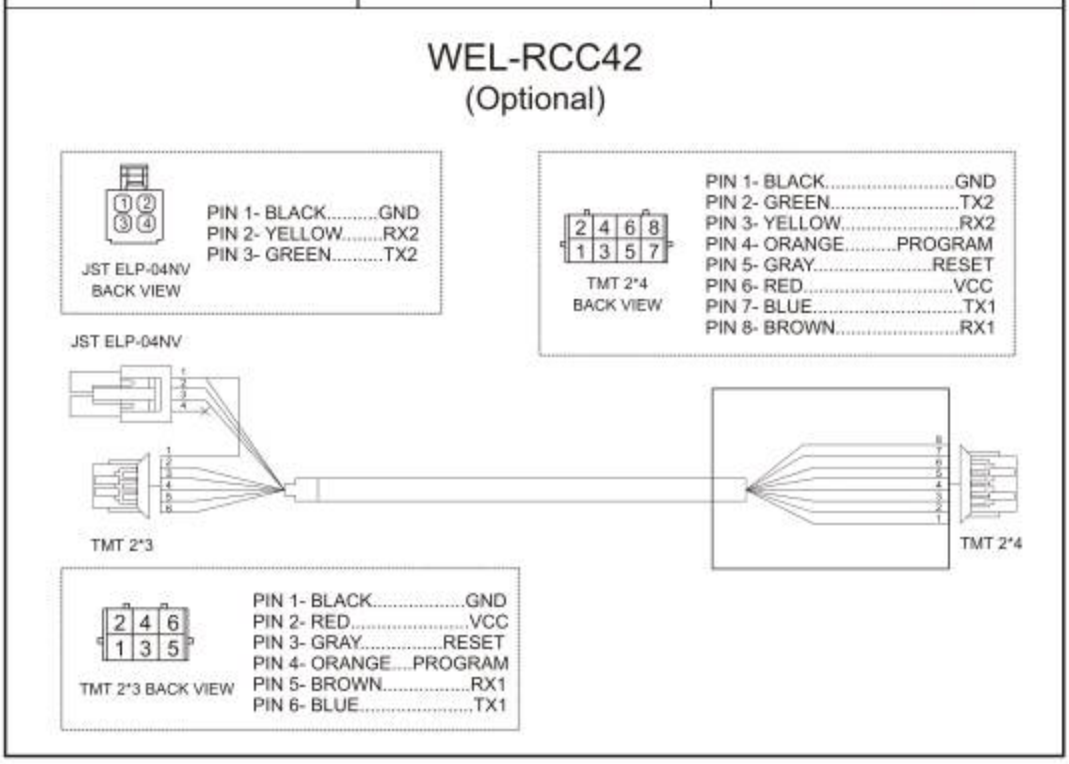

5. I/O Circuit

JPSTD Interface.

5 FIG.01

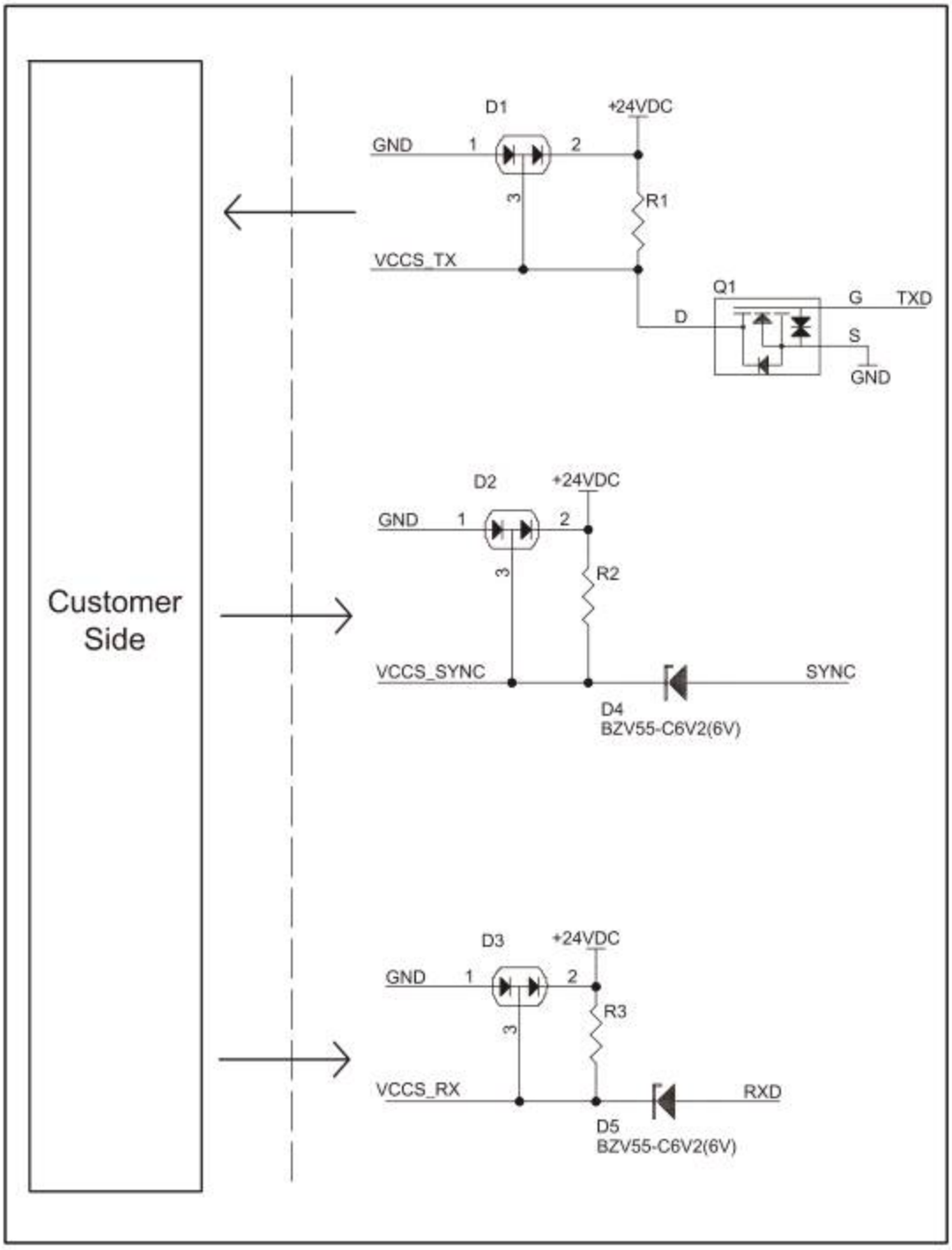

MDB Interface.

5 FIG.02

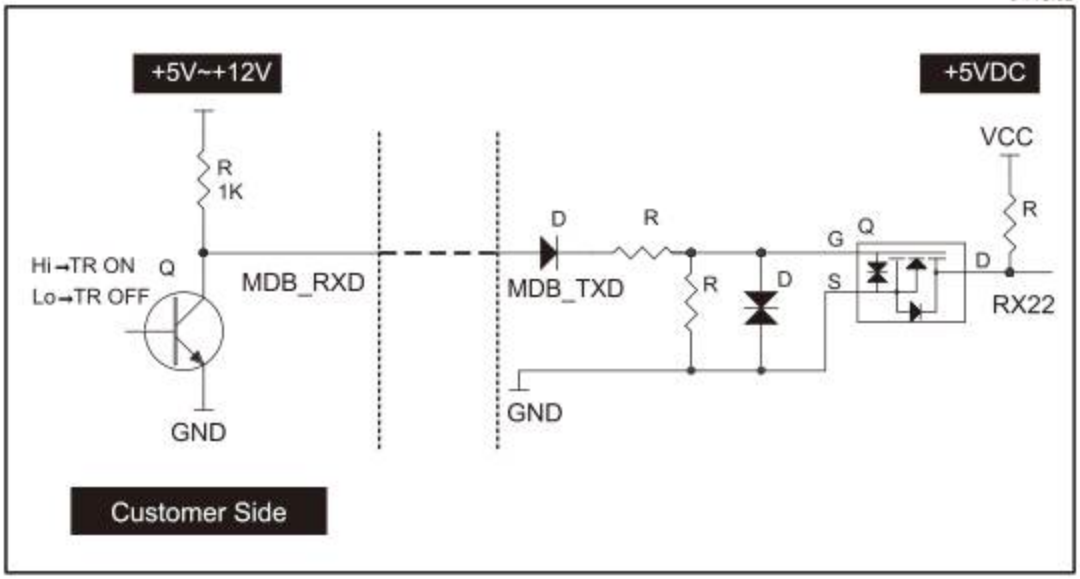

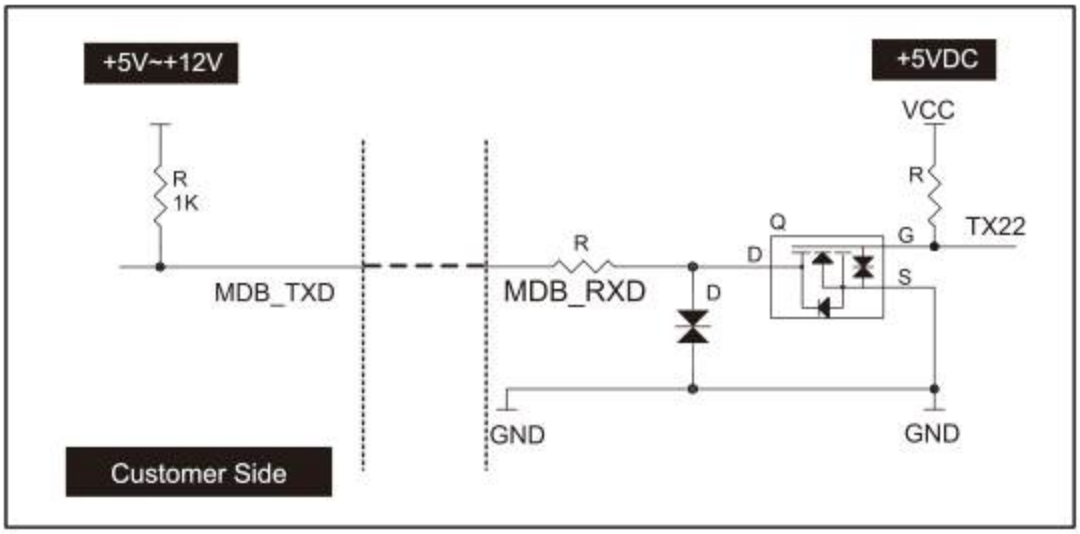

Exective Interface.

5 FIG.03

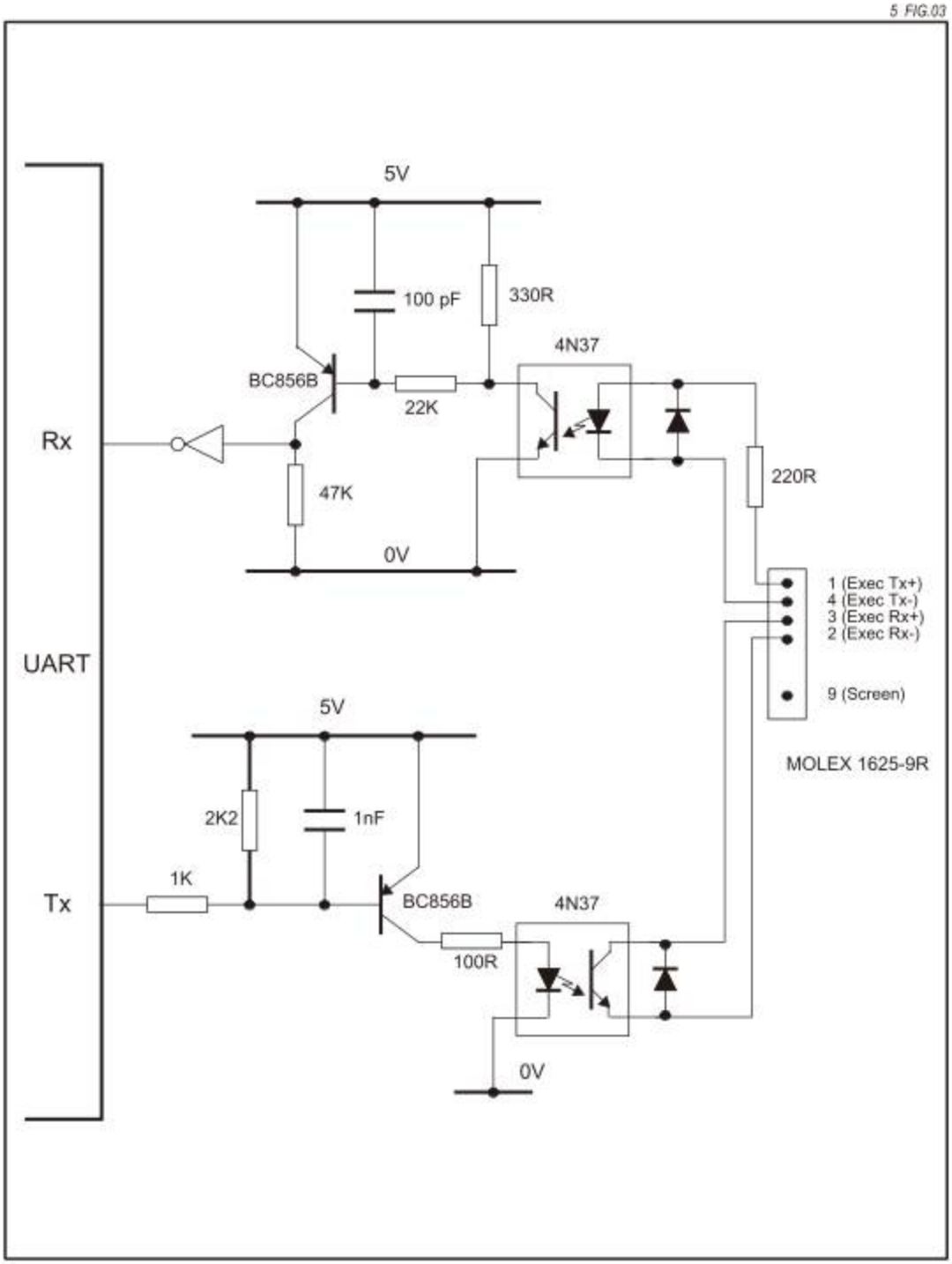

6. Maintenance

To ensure the coin changer operating correctly, following matinace steps are required. ICT suggests cleaning measurment every six month regularly; however, under heavy usage condition or location the maintenance frequency may vary.

WARNING

Before removing the coin changer, please make sure to turn the power off !

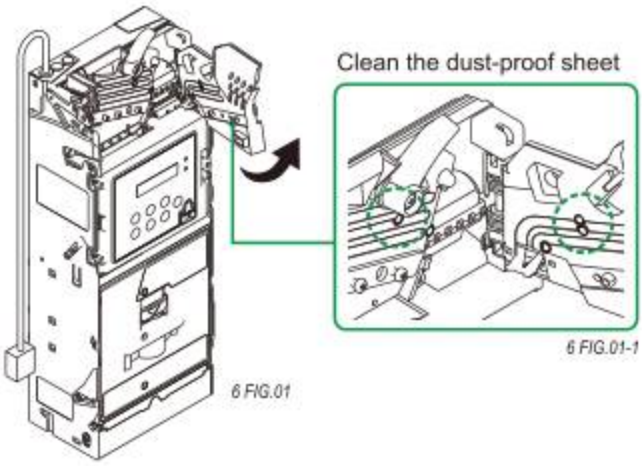

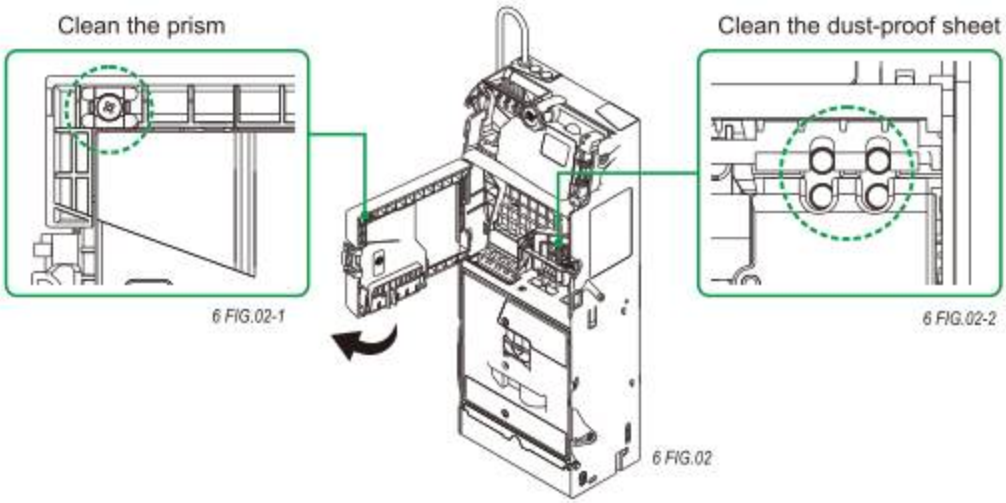

Maintenance Notice
(Any improper maintenance will invalidate warranty.)

Recommended	**Mild, non-abrasive, soap water.**
DO NOT USE	**Organic solvent , Alcohol, Volatility liquid.**

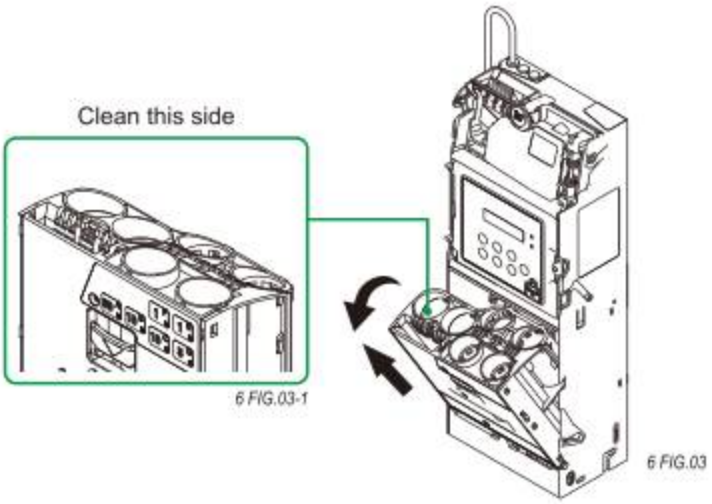

6 FIG.03-1

6 FIG.03

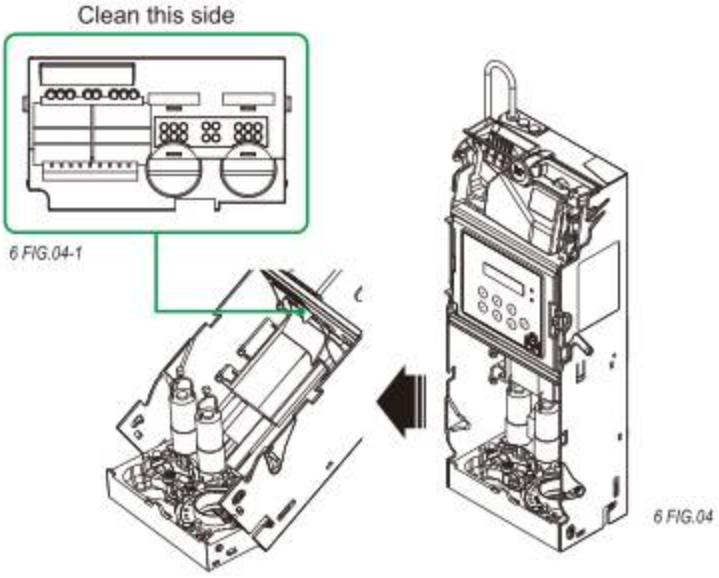

6 FIG.04-1

6 FIG.04

Maintenance Notice
(Any improper maintenance will invalidate warranty.)

Recommended	**Mild, non-abrasive, soap water.**
DO NOT USE	**Organic solvent , Alcohol, Volatility liquid.**

7. Troubleshooting

7-1. Error Code Messages

7-1 TABLE 01

Code	Cause	LED
E10	LCM Panel Open	5 Red + 2 Red
E11	Checksum Error	Red Light
E12	Signal from the coin base was not received when the power was turned on.	Red Light
E13	Two seconds after activation, the SYSTEM did not wait for the READY signal from the DEVICE and jumped to the exception.	1 Red
	Two seconds after a transaction, the SYSTEM did not wait for the READY signal triggered by the DEVICE.	
E14	Coil 1 is damaged.	3 Red + 1 Red
E15	Coil 2 is damaged.	3 Red + 2 Red
E16	Coil 3 is damaged.	3 Red + 3 Red
E17	Low level LED is damaged.	3 Red + 5 Red
E18	Coin separator sensor problem.	3 Red + 4 Red
E19	The deck is open for over 30 seconds.	5 Red + 1 Red
E20	Both the first and second group motors cannot be positioned.	7 Red
E21	The first motor group cannot be positioned. The first motor group might be damaged, coin or foreign objects might have caused the motor to stuck, coins are stuck in the coin tube, or the semicircle disk has derailed.	None
E22	The second motor group cannot be positioned. The second motor group might be damaged, coin or foreign objects might have caused the motor to stuck, coins are stuck in the coin tube, or the semicircle disk has derailed.	None
E23	Broke away or incorrectly positioned coin tubes.	5 Red
E24	Coins got stuck at the coin separation area or the coin tube opening twice in a row, causing the HI Level Sensor to fail to detect the coin twice in a row.	6 Red + 4 Red
E25	"A" Tube Low Level = empty, HI Level = full at setup.	None
E26	"B" Tube Low Level = empty, HI Level = full at setup.	None
E27	"C" Tube Low Level = empty, HI Level = full at setup.	None
E28	"D" Tube Low Level = empty, HI Level = full at setup.	None
E29	"E" Tube Low Level = empty, HI Level = full at setup.	None
E30	"F" Tube Low Level = empty, HI Level = full at setup.	None
E31	Barcode Reader error.	None
E32	The three sets of LEDs used to distinguish Coin size have been damaged.	None
E33	Recognition Ver Error	None
E35	Normal Mode Fished. Only for THB	None
E36	Security Mode Locked. Only for THB	None
E37	Security Mode Losted. Only for THB	None
E38	Coin Calibration fail. Only for THB	None
None	The "Inhibit" signal transmitted by the interface.	2 Red

7-2. Error Handling

<LCM Panel Open>

Code:
E10

LED Light Display:
5 Red+ 2 Red

LCM Display:

```
Sorting Module
Door Open     E10
```

Cause:
LCM Panel Open.

Corrective Measure:
Close the LCM panel and verify that the latch is in place. If the problem cannot be solved, notify ICT personnel for support.

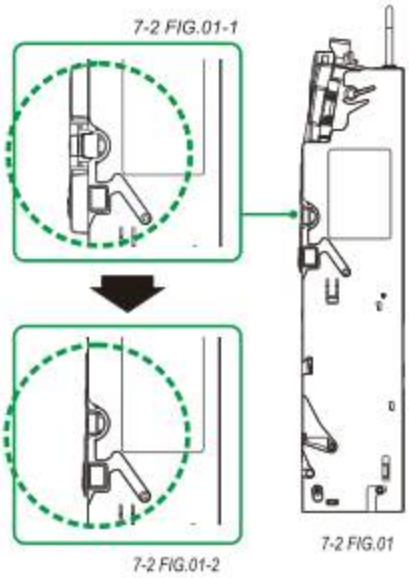

<Checksum Error>

Code:
E11

LED Light Display:
Red light

LCM Display:

```
Check Sum Error
              E11
```

Cause:
Check Sum Error.

Corrective Measure:
Notify the ICT personnel for support.

<Payout Mode Error>

Code:
E12

LED Light Display:
Red light

LCM Display:

```
Payout Mode Err
            E12
```

Cause:
Signal from payout module was not received when power was turned on.

Corrective Method:
Ensure that the signal wire is connected to the payout module.

7-2 FIG.02

<Communication Error>

Code:
E13

LED Light Display:
1 Red

LCM Display:

```
No Communication
with VMC     E13
```

Cause:
1. Two seconds after activation, the SYSTEM did not wait for the READY signal from the DEVICE and jumped to the exception mode.

2. Two seconds after a transaction, the SYSTEM did not wait for the READY signal triggered by the DEVICE.

Corrective Measure:
1. Ensure that the machine interface and the VMC interface are consistent.

2. Ensure that the interface transmission wire is properly connected.

7-2 FIG.03

<#1 Coil Error>

Code:
E14

LED Light Display:
3 Red + 1Red

LCM Display:

```
Coil Error #1
              E14
```

Cause:
Coil 1 is damaged.

Corrective Measure:
Notify the ICT personnel

<#2 Coil Error>

Code:
E15

LED Light Display:
3 Red + 2 Red

LCM Display:

```
Coil Error #2
              E15
```

Cause:
Coil 2 is damaged.

Corrective Measure:
Notify the ICT personnel

<#3 Coil Error>

Code:
E16

LED Light Display:
3 Red + 3 Red

LCM Display:

```
Coil Error #3
              E16
```

Cause:
Coil 3 is damaged.

Corrective Measure:
Notify the ICT personnel

<Low Level LED Error>

Code:
E17

LED Light Display:
3 red+ 5 red

LCM Display:

```
Tube Detection
Sensor Error E17
```

Cause:
Low level LED is damaged. Otherwise, optical lens may be covered by dirt or dust.

Corrective Measure:
When error is detected, changer retries once a minute for 10 times. It will stop if the problem is not resolved after 10 times retry. Clean the optical lens with soft fabric. If the problem cannot be solved, notify ICT personnel for support.

<Sort Sensor Error>

Code:
E18

LED Light Display:
3 red+ 4 red

LCM Display:

```
Sorting Module
Sensor Error E18
```

Cause:
Coin separator sensor problem.

Corrective Measure:
1. Make sure that the reflective prism is not dirty or blocked by foreign objects. If it is,remove the foreign object and clean the reflective prism.
2. Changer retries once a minute for 10 times when error is detected. It will stop if the problem is not resolved after 10 times retry.

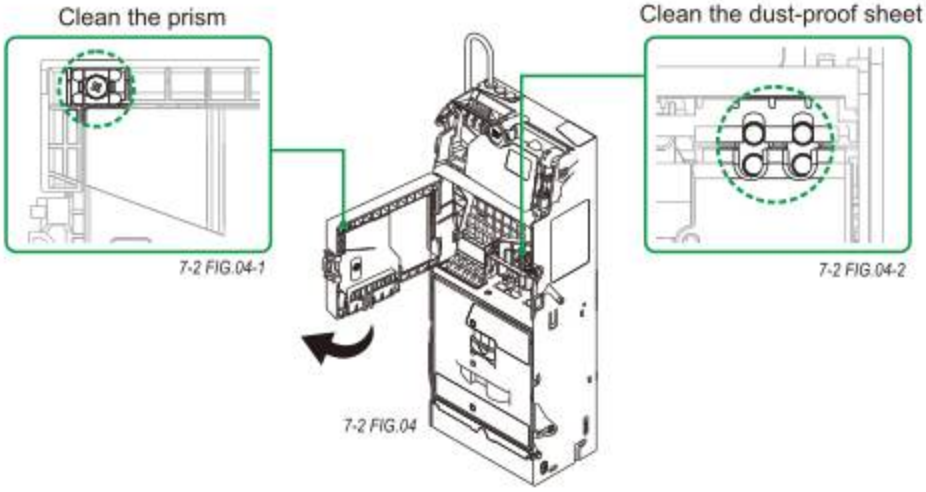

<Deck Open Problem>

Code:
E19

LED Light Display:
5 Red +1 Red

LCM Display:

```
Flight Deck
Error    E19
```

Cause:
1. The deck is open for over 30 seconds.
2. The reject bar has problem.

Corrective Measure:
1. Close the deck and reactive the power.
2. Retry once a minute for 10 times, if the problem is not resolved then remove the LCM panel to leave this exception and notify ICT personnel for support.

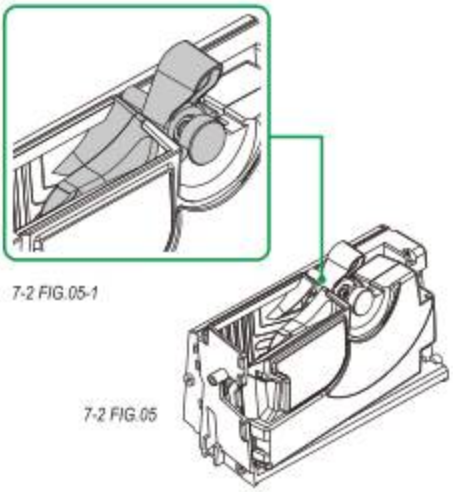

7-2 FIG.05-1

7-2 FIG.05

<Motor Error: A & B>

Code:
E20

LED Light Display:
7 Red

LCM Display:

```
Coin Jam
              E20
```

Cause:
Both the first and second group motors cannot be positioned.

Corrective Measure:
Please reference instructions for “E21” and “E22” below.

<Motor Error: A>

Code:
E21

LED Light Display:
None

LCM Display:

```
Left Coin Jam
              E21
```

Cause:
The first motor group cannot be positioned. The first motor group might be damaged, coin or foreign objects might have caused the motor to stuck, coins are stuck in the coin tube, or the semicircle disk has derailed.

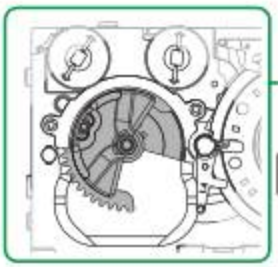
7-2 FIG.06-1

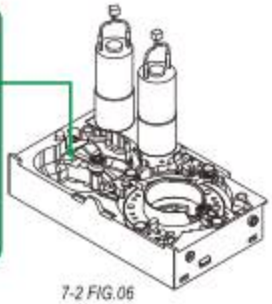
7-2 FIG.06

Corrective Measure:

1. Confirm whether a foreign object has caused the semicircle disk to get stuck. If yes, remove the object and turn on the power again. Use buttons **A** and **B** of the LCM to test and determine whether the semicircle disk can be returned to its normal position. If it does, then the machine has returned to its normal operation.

2. Verify whether the semicircle disk has derailed. If yes, turn off the power and remove the washer, then reinstall the disk back onto the track and reactive the machine. Use buttons **A** and **B** of the LCM to test and determine whether the semicircle disk can be returned to its normal position. If it does, then the machine has returned to normal operation.

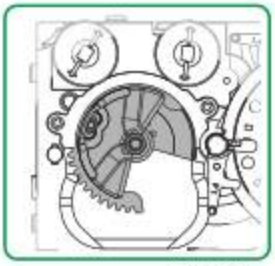
7-2 FIG.07

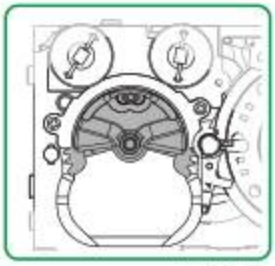
7-2 FIG.07-1

3. Turn on the power again and use buttons **A** and **B** of the LCM to test and determine whether the semicircle disk can be returned to its normal position. If it does, then the machine has returned to normal operation. If nothing happens, then the first motor group has been damaged. Please notify the ICT personnel to handle the problem.

4. Verify whether the openings of the **A** and **B** tube has been stuck by a coin. If a tube has been stuck, remove the stuck coin, reassemble the coin tube, and turn on the power again. Use buttons **A** and **B** of the LCM to test whether tubes **A** and **B** can discharge coins correctly. If it does, then the machine has returned to normal operation.

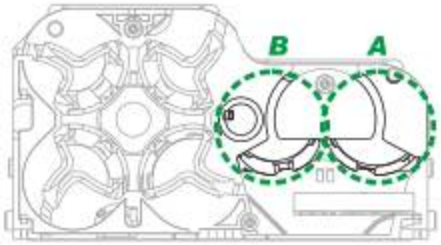

7-2 FIG.08

<Motor Error: B>

Code:
E22

LED Light Display:
None

LCM Display:

```
Right Coin Jam
            E22
```

Cause:
The second motor group cannot be positioned. The second motor group might be damaged, coin or foreign objects might have caused the motor to stuck, coins are stuck in the coin tube, or the semicircle disk has derailed.

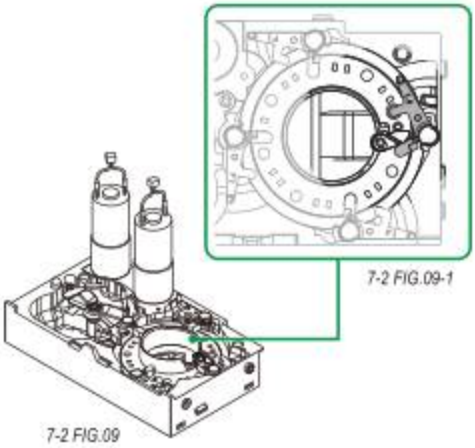
7-2 FIG.09-1
7-2 FIG.09

Corrective Measure:

1. Confirm whether a foreign object has caused an obstruction. If yes, remove the object and turn on the power again and determine if the coin rod can return back to its position. Use buttons **C, D, E** and **F** of the LCM to test and determine whether the coin rod can hit the coin correctly.
   If it does, then the machine has returned to normal operation.

2. Turn on the power again to observe whether the disk has repositioned itself. If it does not, then the second motor group is damaged. Please notify the ICT personnel for support.

3. Confirm whether the coin rod is stuck. If it is then manually move the rod back to its position. Turn on the power again and use buttons **C, D, E** and **F** of the LCM to test whether the coin rod can hit the coin correctly.
   If it does, then the machine has returned to normal operation.

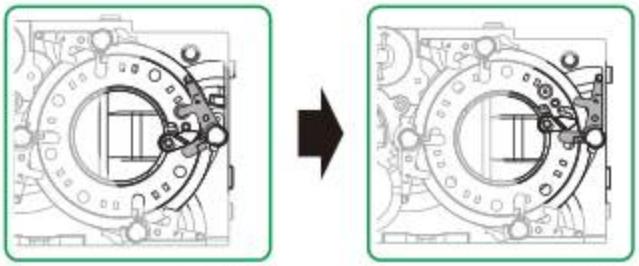

7-2 FIG.10 7-2 FIG.10-1

4. Confirm whether **C, D, E** and **F** tube outlets are stuck by coins. If yes, remove the coins and reinstall the tube cassette. Turn on the power again and use buttons **C, D, E** and **F** of the LCM to test whether coins can be discharged correctly.
   If it does, then the machine has returned to normal operation.

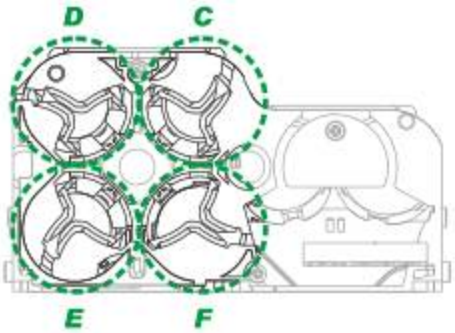

7-2 FIG.11

<Cassette Out>

Code:
E23

LED Light Display:
5 Red

LCM Display:

```
Inhibit
Cassette Out  E23
```

Cause:
Parts malfunction or coin tubes have been incorrectly positioned.

Corrective Measure:
Ensure that the coin tubes are correctly positioned.

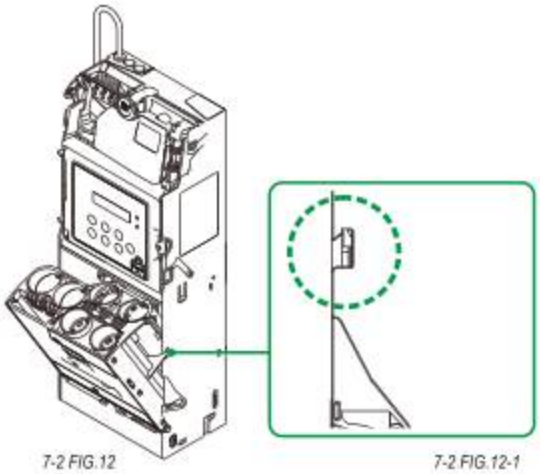

7-2 FIG.12

7-2 FIG.12-1

<Tube H/L Sensor Error>

Code:
E24

LED Light Display:
6 Red + 4 Red

LCM Display:

```
Coin->Tube
Sensor Error E24
```

Cause:
Coins got stuck at the coin separation area or the coin tube opening twice in a row, causing the HI Level Sensor to fail to detect the coin twice in a row.

7-2 FIG.13-1

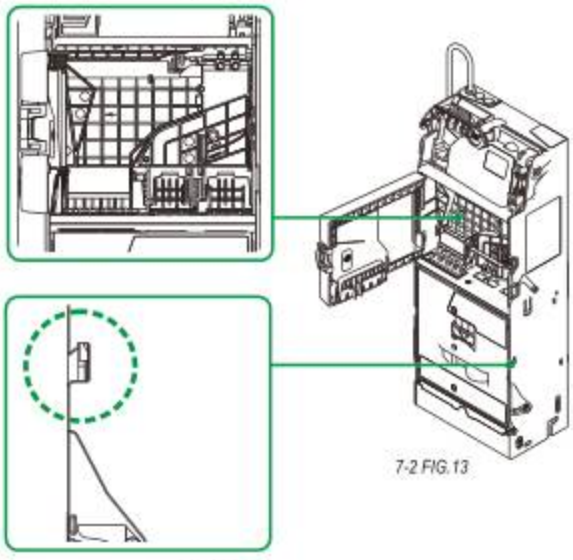

7-2 FIG.13

7-2 FIG.13-2

Corrective Measure:

1. Open the LCM panel to verify whether coins are stuck in the coin separation area. If yes, then push aside the transparent latch for the coin guiding board, remove the coin guiding board, remove the stuck coins, and then reinstall the coin guiding board. Turn on the power again. Insert each denomination to ensure that it enters the corresponding coin tube. If yes,then the problem has been resolved.

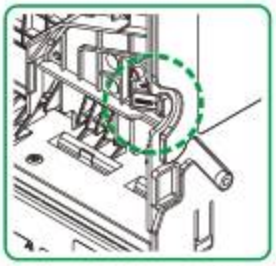

7-2 FIG.14

2. Ensure that the coin tubes have been positioned correctly. Restart the power. Insert each denomination to ensure that it enters the corresponding coin tube. If yes, then the problem has been resolved.

7-2 FIG.15

<Tube H/L Sensor Error: A>

Code:
E25

LED Light Display:
None

LCM Display:

```
Tube A Sensor
Error        E25
```

Cause:
Low Level = empty, Hi Level = full.
Coin might be sorted to wrong tube.

Corrective Measure:
Changer retries every 2 seconds during the standby mode. Remove the stuck coin then restart changer to solve the problem.

<Tube H/L Sensor Error: B>

Code:
E26

LED Light Display:
None

LCM Display:

```
Tube B Sensor
Error        E26
```

Cause:
Low Level = empty, Hi Level = full.
Coin might be sorted to wrong tube.

Corrective Measure:
Changer retries every 2 seconds during the standby mode. Remove the stuck coin then restart changer to solve the problem.

<Tube H/L Sensor Error: C>

Code:
E27

LED Light Display:
None

LCM Display:

```
Tube C Sensor
Error        E27
```

Cause:
Low Level = empty, Hi Level = full.
Coin might be sorted to wrong tube.

Corrective Measure:
Changer retries every 2 seconds during the standby mode. Remove the stuck coin then restart changer to solve the problem.

<Tube H/L Sensor Error: D>

Code:
E28

LED Light Display:
None

LCM Display:

```
Tube D Sensor
Error        E28
```

Cause:
Low Level = empty, Hi Level = full.
Coin might be sorted to wrong tube.

Corrective Measure:
Changer retries every 2 seconds during the standby mode. Remove the stuck coin then restart changer to solve the problem.

<Tube H/L Sensor Error: E>

Code:
E29

LED Light Display:
None

LCM Display:

```
Tube E Sensor
Error        E29
```

Cause:
Low Level = empty, Hi Level = full.
Coin might be sorted to wrong tube.

Corrective Measure:
Changer retries every 2 seconds during the standby mode. Remove the stuck coin then restart changer to solve the problem.

<Tube H/L Sensor Error: F>

Code:
E30

LED Light Display:
None

LCM Display:

```
Tube F Sensor
Error        E30
```

Cause:
Low Level = empty, Hi Level = full.
Coin might be sorted to wrong tube.

Corrective Measure:
Changer retries every 2 seconds during the standby mode. Remove the stuck coin then restart changer to solve the problem.

<Tube H/L Sensor Error: E>

Code:
E29

LED Light Display:
None

LCM Display:

```
Tube E Sensor
Error        E29
```

Cause:
Low Level = empty, Hi Level = full.
Coin might be sorted to wrong tube.

Corrective Measure:
Changer retries every 2 seconds during the standby mode. Remove the stuck coin then restart changer to solve the problem.

<Tube H/L Sensor Error: F>

Code:
E30

LED Light Display:
None

LCM Display:

```
Tube F Sensor
Error        E30
```

Cause:
Low Level = empty, Hi Level = full.
Coin might be sorted to wrong tube.

Corrective Measure:
Changer retries every 2 seconds during the standby mode. Remove the stuck coin then restart changer to solve the problem.

<Barcode Reader Error>

Code:
E31

LED Light Display:
None

LCM Display:

```
BarCode Sensor
Error        E31
```

Cause:
Barcode Reader error.

Corrective Measure:
Ensure that the Barcode Reader is not dirty or blocked by foreign objects. If yes, then clean the Barcode Reader or remove the obstruction.

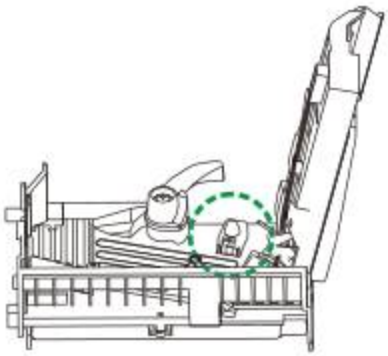

7-2 FIG.16

CAUTION

The machine would continue to work despite the Barcode Reader error.

<Coin Size LED Error>

Code:
E32

LED Light Display:
None

LCM Display:

```
Diameter Sensor
Error        E32
```

Cause:
The three sets of LEDs used to distinguish Coin size have been damaged.

Corrective Measure:
Open the deck. Ensure that the Sensor and LED are not dirty or blocked by foreign objects. If they are, then clean the Sensor and LED or remove the obstruction. If the problem cannot be solved, notify ICT personnel for support.

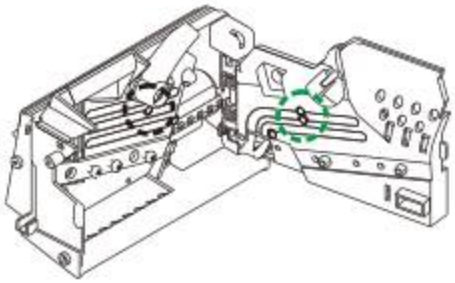

7-2 FIG.17

<Recognition Ver Error>

Code:
E33

LED Light Display:
None

LCM Display:

```
Recognition Ver
Error        E33
```

Cause:
Recognition Module Damage.

Corrective Measure:
Notify the ICT personnel.

<Tube H/L Sensor Error– Fishing>

Code:
E35

LED Light Display:
None

LCM Display:

```
Normal Mode
Fished       E35
```

Cause:
Refer E24.

Corrective Measure:
Refer LCM MENU 151.

<Tube H/L Sensor Error–Locked>

Code:
E36

LED Light Display:
None

LCM Display:

```
Security Mode
Locked       E36
```

Cause:
Refer E24

Corrective Measure:
Refer LCM MENU 151.

<Tube H/L Sensor Error–Coin Value Losted>

Code:
E37

LED Light Display:
None

LCM Display:

```
Security Mode
Locked       E37
```

Cause:
Refer E24.

Corrective Measure:
Refer LCM MENU 151.

<Inhibit By VMC>

Code:
None

LED Light Display:
2 Red

LCM Display:

```
Inhibit By
   VMC!!
```

Cause:
The **"Inhibit"** signal transmitted by the interface.

Corrective Measure:
None

8. Firmware Download and Upgrade Instruction

Statement

This document is established and written purely for the convenience of the customers. The document does not clearly specify the legal responsibilities assumed by the International Currency Technologies (ICT) Corp. The ICT Corp. reserves all rights to the original records of legal writings and intellectual properties, including subsequent modifications of the figures and updates of the texts.

This Document is only Applicable to the Corresponding Coin Changer Products.

This document provides detailed downloading and burning steps as follows:

8-1. MCU STM32 Firmware Download by FP-004

8-1-1. Tools

Please prepare the download burning box and related wire accessories ready

1. Tool-kit Box: FP-004 x 1pc
2. Cable-wires: #WEL-RF303 x 1pc
   #WEL-RCC42 x 1pc

8-1-2. Connection

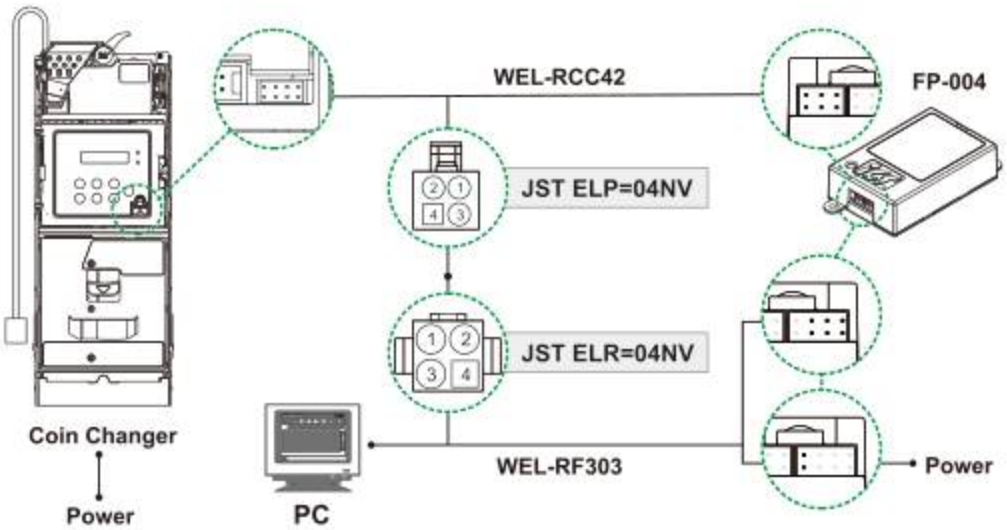

8-1-3. Start Download Process

1. Please ensure that the RS232 connection from PC to FP-004 works properly; if not, check whether RS-232 program and driver has been activated.

2. Click and execute FP4DT.exe

8-1-3 FIG.01

3. Select **Coin Changer**, **STM8**, type of **FP004 download box**, **RS232 COM port,** and specify the path for file download (only accept files with **.s19** extensions).

8-1-3 FIG.02

4. Select **"Download".**

5. Download provides two options, direct download to the Coin Changer, or download and burn to the FP-004 control box.

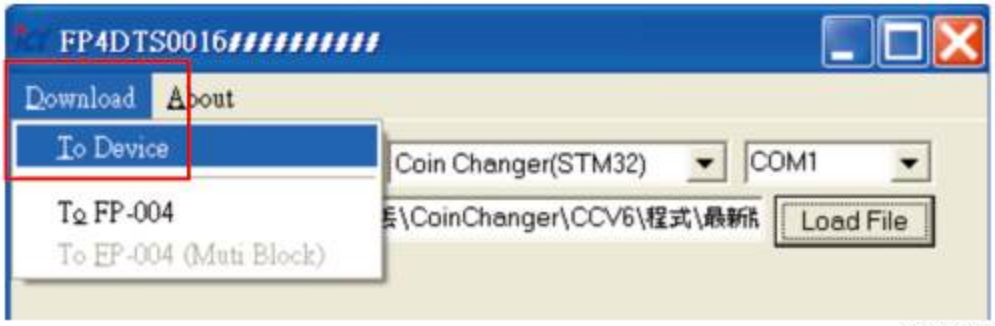

8-1-3 FIG.03

6. Select the download option then the process would execute automatically
   (The left-bottom corner of the screen shows the communication status)

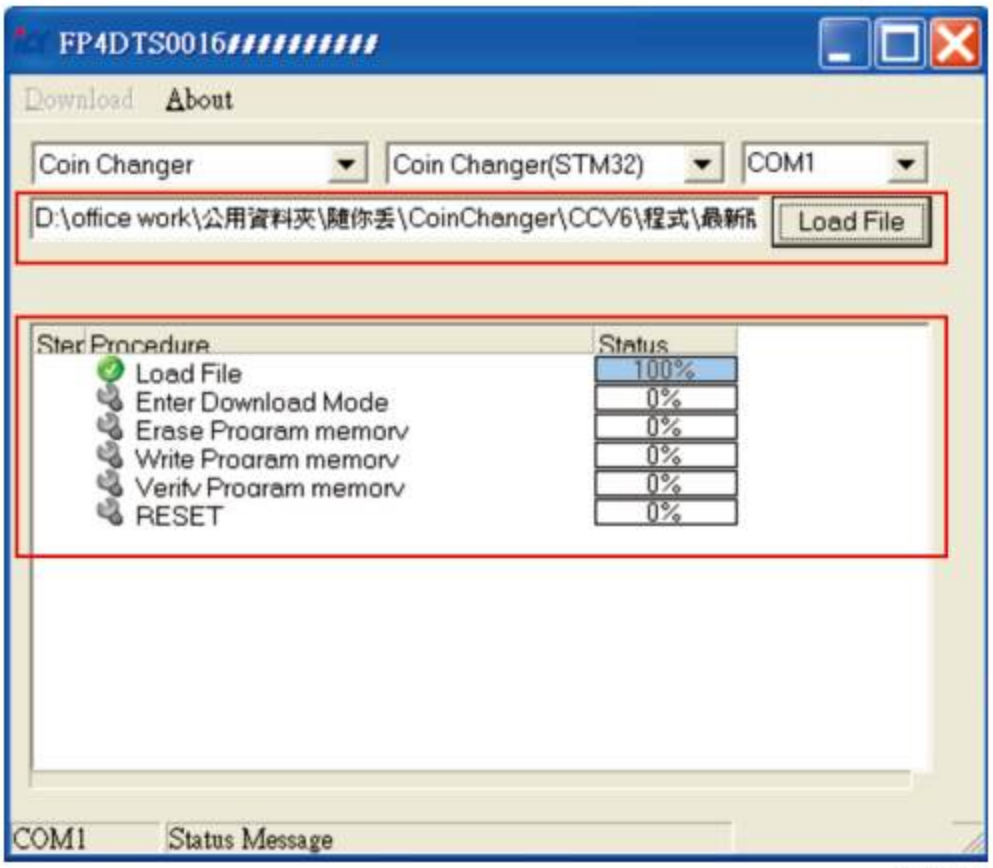

8-1-3 FIG.04

7. Download Completed, all procedures reach 100%.

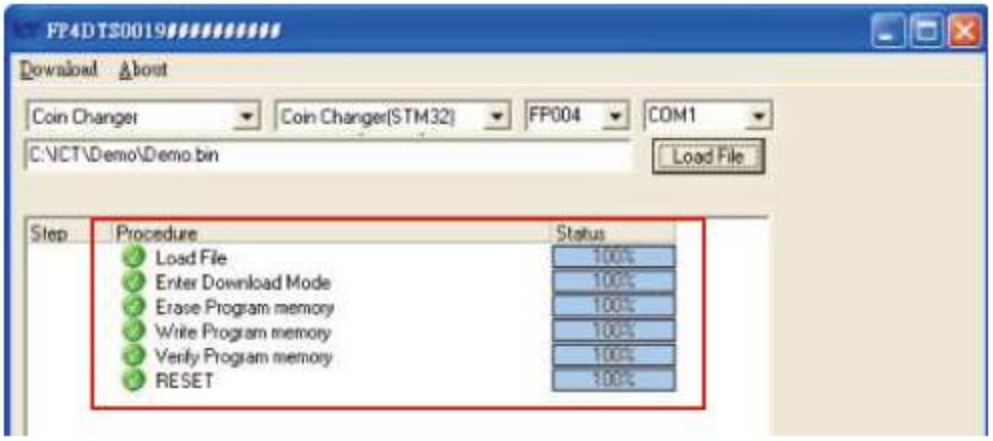

8-1-3 FIG.05

8-2. MCU STM32 Firmware Download by IrDA Special Function

8-2-1. Tools

Please prepare related accessories ready

1. PDA supports IrDA download.

8-2-2. Connection

Please keep distance between changer and PDA within 5 cm, angle deviation less than 5 degree.

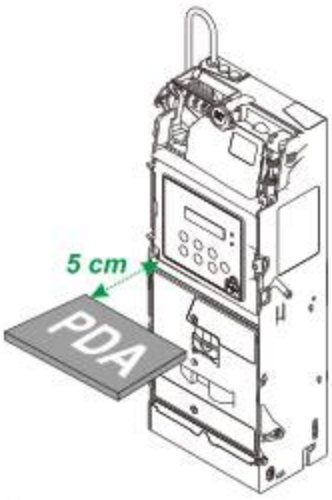

8-2-2 FIG.01

8-2-3. Start Download Process

1. Turn on power and prepare changer in standby status.
2. Start download procedure of PDA to update firmware.

9. PC Tool Instruction

To setup Changer through PC Tool, please prepare tools and connection as following chapter instruction: Chapter 8-1-1. Tools
Chapter 8-1-2. Connection

9-1. Cashfloat Setting

9-1-1. Set Changer to Initial Setting

1. Open PC Tool. Select **"Cashfloat Setting"** function item.

2. Select Changer Type.

9-1-1 FIG.01

3. Select tube setting from the list then PC tool will display the setting.

9-1-1 FIG.02

4. Click **"Write Initial Setting"** button to start download process.

5. To confirm whether the changer has been correctly setup, click **"Read Setting From CC"** to load changer setting and display on PC tool for confirmation.

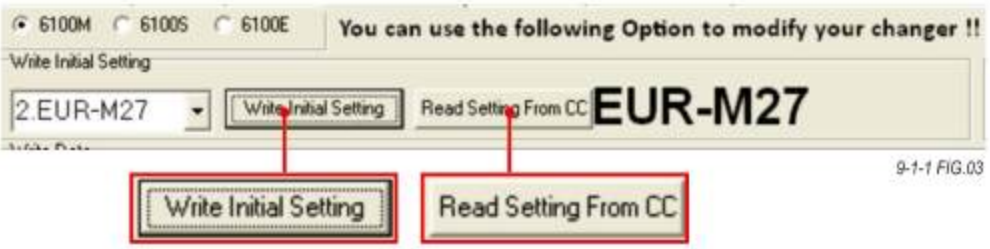

9-1-1 FIG.03

9-1-2. Set Changer to Customization Setting

1. Open PC Tool. Select **"Cashfloat Setting"** function item.
2. Select Changer Type.
3. Select tube setting from the list then PC tool will display the setting.
4. Modify the settings to customization configuration.

The setting items may vary depends on different region.

9-1-2 FIG.01

5. Click **"Set Coin Changer"** button to start download process.

6. To check whether the changer has been correctly setup, click **"Read Setting From CC"** to load changer setting and display on PC tool for confirmation.

9-1-3. Set Coin Channels Executive only

1. Open PC Tool. Select **"Cashfloat Setting"** function item.
2. Select Changer Type.

Channel setting function only applies to **6100E** type.

9-1-3 FIG.01

3. Select tube setting from the list then PC tool will display the setting.
   Click **"Read Setting From CC"** to load current changer channel setting for editing.
   Channel setting list in the right bottom area for editing.
   For price channel position, please see listed sequence as figure below.

Notice! Every block need to be filled price in before set to changer. If channel price is 0, input 0 to blocks.

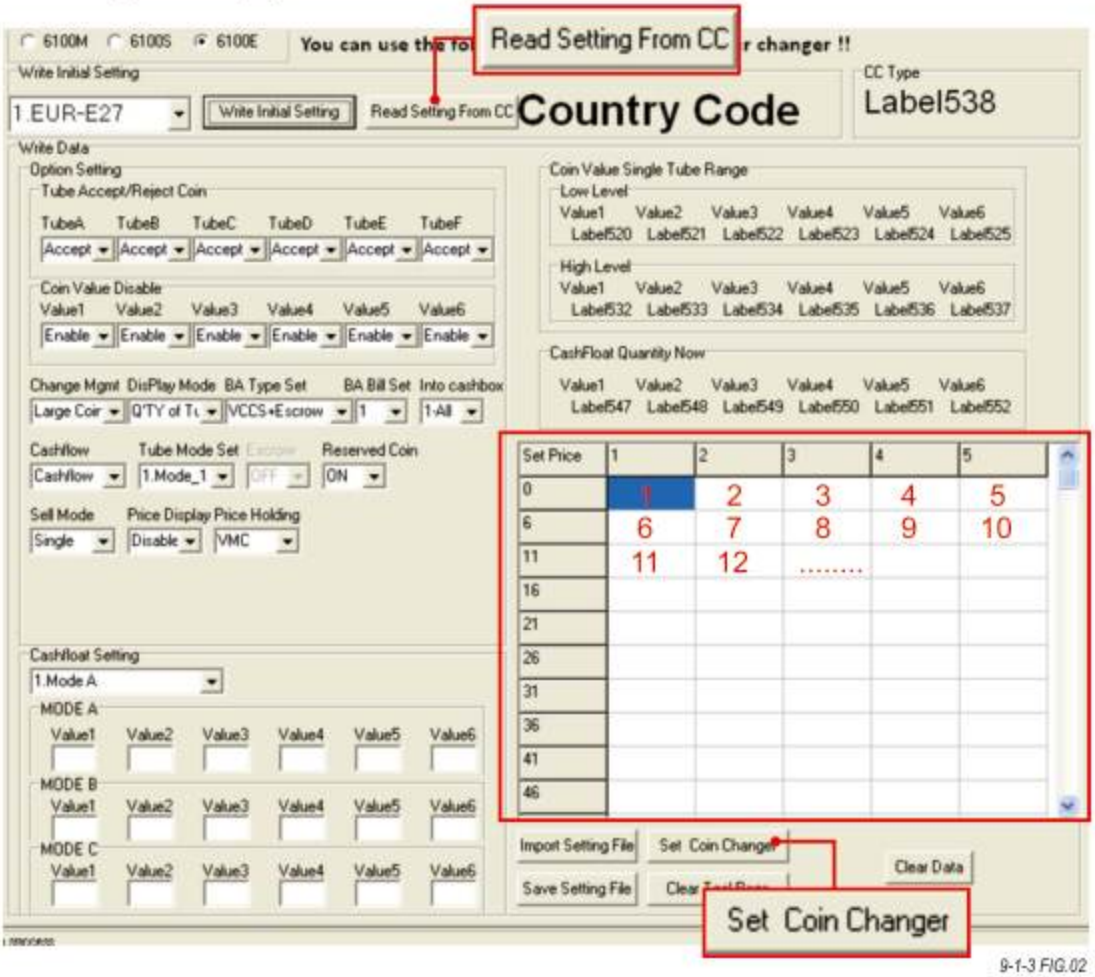

9-1-3 FIG.02

4. After filling channel price into list, click **"Set Coin Changer"** to save setting to changer.

9-1-4. Setup File Management

Import Setting File

1. Click **"Import Setting File"** to load setup file, a file selection window shows up.
2. Choose setup file in .ini format and click open to load.
3. PC Tool displays setting of the imported file.

   User can then click **"Set Coin Changer"** to download or made setup modification.

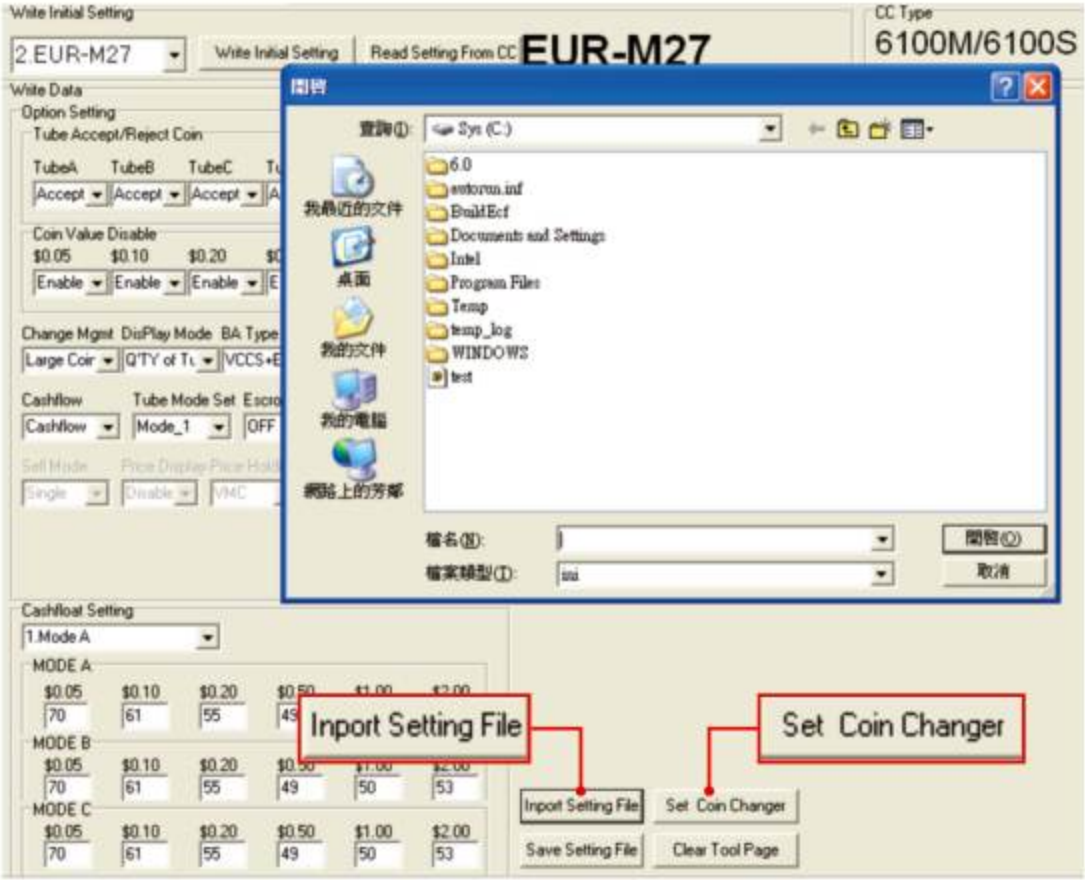

9-1-4 FIG.01

Save Setting File

1. Choose setting options to customized configuration for saving.
2. Click **"Save Setting File"** to save a setup file, a file saving window shows up.
3. Choose file path and input file name, and then click save to complete saving.
   Setup file will be saved as an .ini file

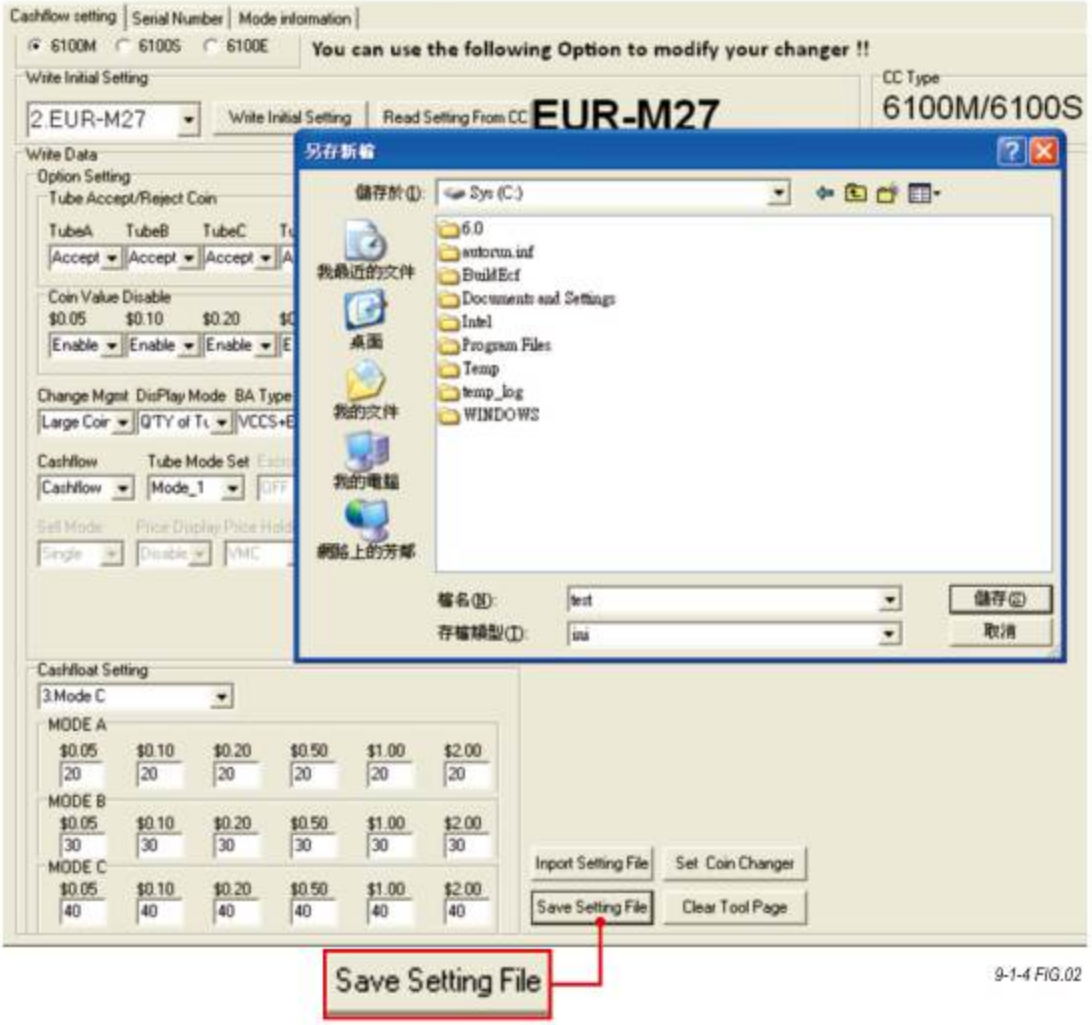

9-1-4 FIG.02

9-2. Serial Number Setting

9-2-1. Set Serial Number

1. Open PC Tool. Select **"Serial Number"** function item.

2. To set serial number, Input serial number in blocks. The serial number in blocks will be setting into changer.
   Then click **"Write"** button to set serial number to changer.
   "Setting Finish!" message shows up after setting finished. Click **"OK"** to close the message.

9-2-1 FIG.01

3. To check serial number of the changer, click **"Read"** button to load.
   Serial number will display in blocks.
   Before loading further serial number, click **"Clear label"** button to clear numbers in blocks.

9-2-1 FIG.02

Notice:
Customer Number contains 16 digits and each digit applies to 0~9.
Machine Number contains 12 digits and each digit applies to 0~9 or A~Z.

10. Read Audit Data

This document provides detailed audit data read out steps as following methods:
Read audit data by ICT MTB
Read audit data by IrDA

10-1. Read Audit Data by ICT MTB

10-1-1. Tools

Please prepare download box and related wire accessories ready

1. Tool Kit Box: MTB x 1pc
2. Cable-wires: #WEL-RSB04 x 1pc

10-1-2. Connection

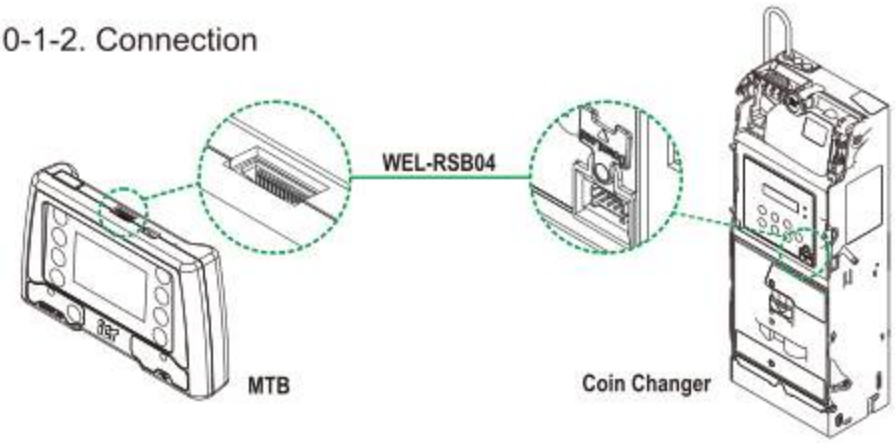

10-1-3. Start Read Audit Data by MTB

1. Prepare connection above and set changer in standby status for data read out.

2. Turn on MTB power and enter **"Changer Operate"** mode.

3. Select **"Read Audit Data"** to execute read out process, the .eva audit data will be saved to SD card of MTB.
   Then MTB request whether to clear audit data in changer? Choose Yes/No to determine whether to clear audit data in changer.

4. Turn off MTB power before disconnection from MTB to Changer. Remove SD card from MTB to read out **.eva** file from PC.

**For detail MTB Instruction, please refer to MTB Manual.*

10-2. Read Audit Data by IrDA

To read audit data by IrDA, please prepare tools and connection as following chapter instruction: Chapter 8-2-1. Tools
Chapter 8-2-2. Connection

1. Prepare connection above and set changer in standby status for data read out.

2. Use PDA IrDA component to point directly to the IrDA of changer.

3. Start audit data transmission. A file format in .eva will be saved to PDA.

Notice! If audit data has been successfully read out, the audit data in changer would be automatically cleared, but not include serial numbers.

11. Module Assembling Procedure

11-1. Upper Module Disassembling

Step 1.
Press down the shell stabilization leaver until the fixed axis is fully exposed.

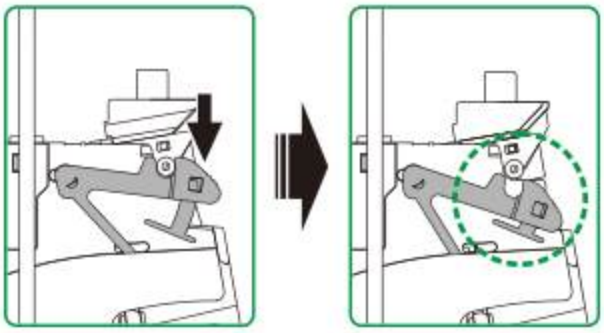

11-1 FIG.01 11-1 FIG.01-1

Step 2.
Pull and rotate the upper half of the module forward.

Step 3.
After the upper half of the module is pulled out, unplug the soft gray cable, and then lift upward at a 35 degree angle until the end.

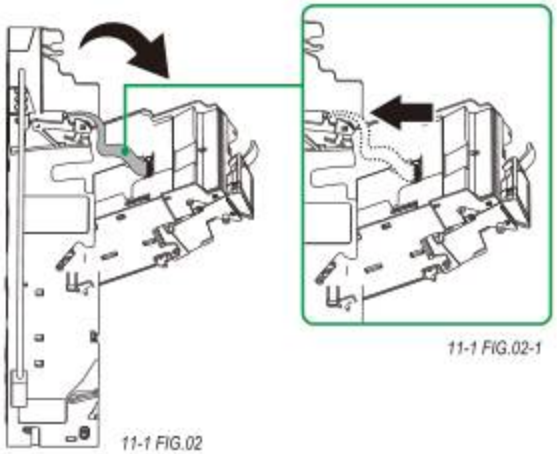

11-1 FIG.02-1

11-1 FIG.02

Step 4.
Pull the upper half of the module out of the shell.

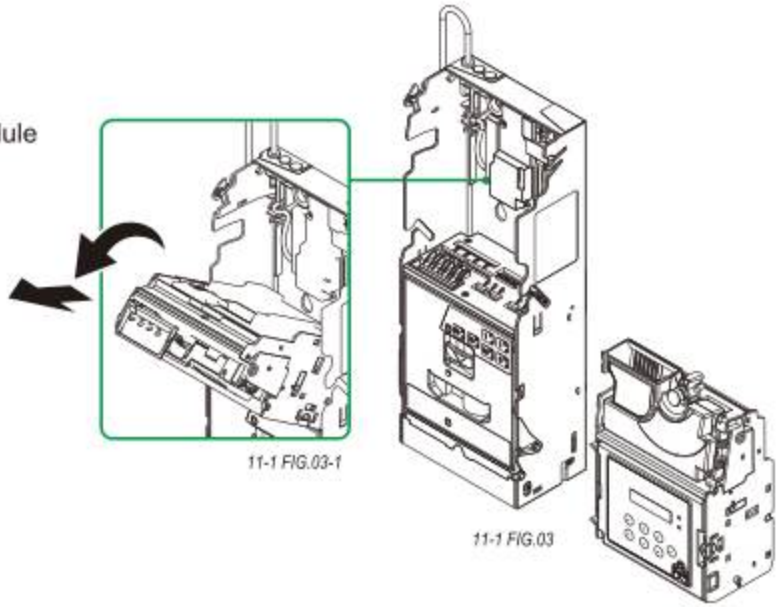

11-1 FIG.03-1

11-1 FIG.03

11-2. Recognition Module Disassembling

Step 1.
Turn the upper half of the module towards the back and ensure that the two fix points of the modules are flipped to the two sides.

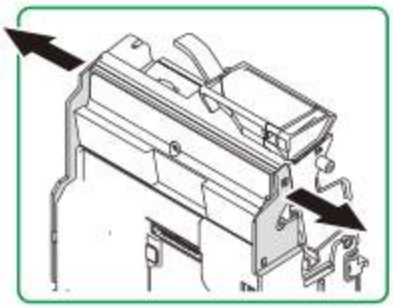

11-2 FIG.01

Step 2.
Pull out the recognition module.

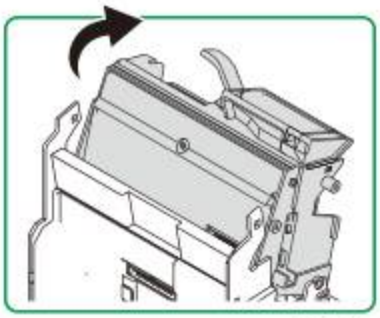

11-2 FIG.02

Step 3.
Unplug the wire connecting to the identification module.

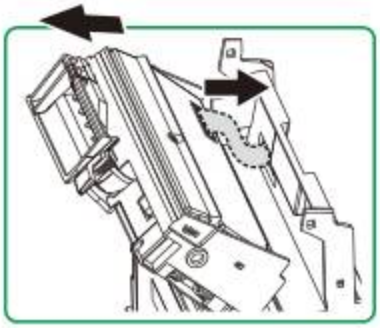

11-2 FIG.03

Step 4.
Pull and remove the recognition module.

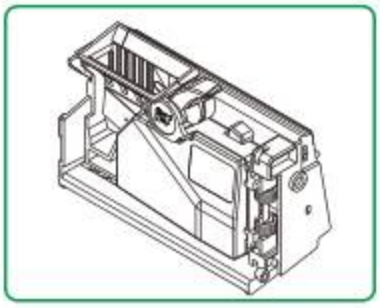

11-2 FIG.04

11-3. Coin Discharge Module Disassembling

Step 1.
Remove the two screws on the sides of the coin discharge module.

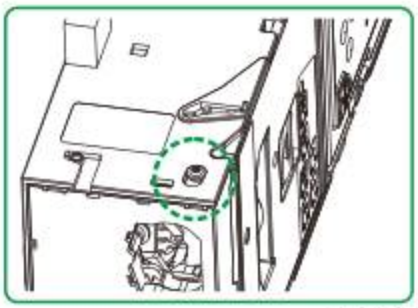

11-3 FIG.01

Step 2.
Rotate the coin discharge module downward 90 degrees.

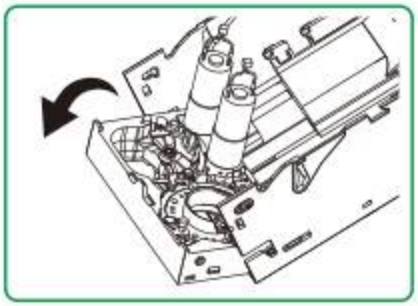

11-3 FIG.02

Step 3.
Unplug the wire connecting to the coin discharge module.

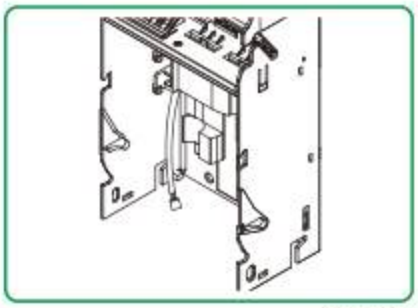

11-3 FIG.03

Step 4.
Pull and remove the coin discharge module.

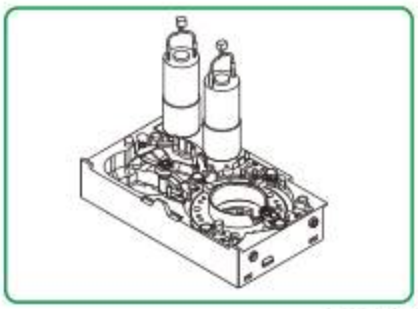

11-3 FIG.04

12. Module Exploded Views(CC6100-TWD)

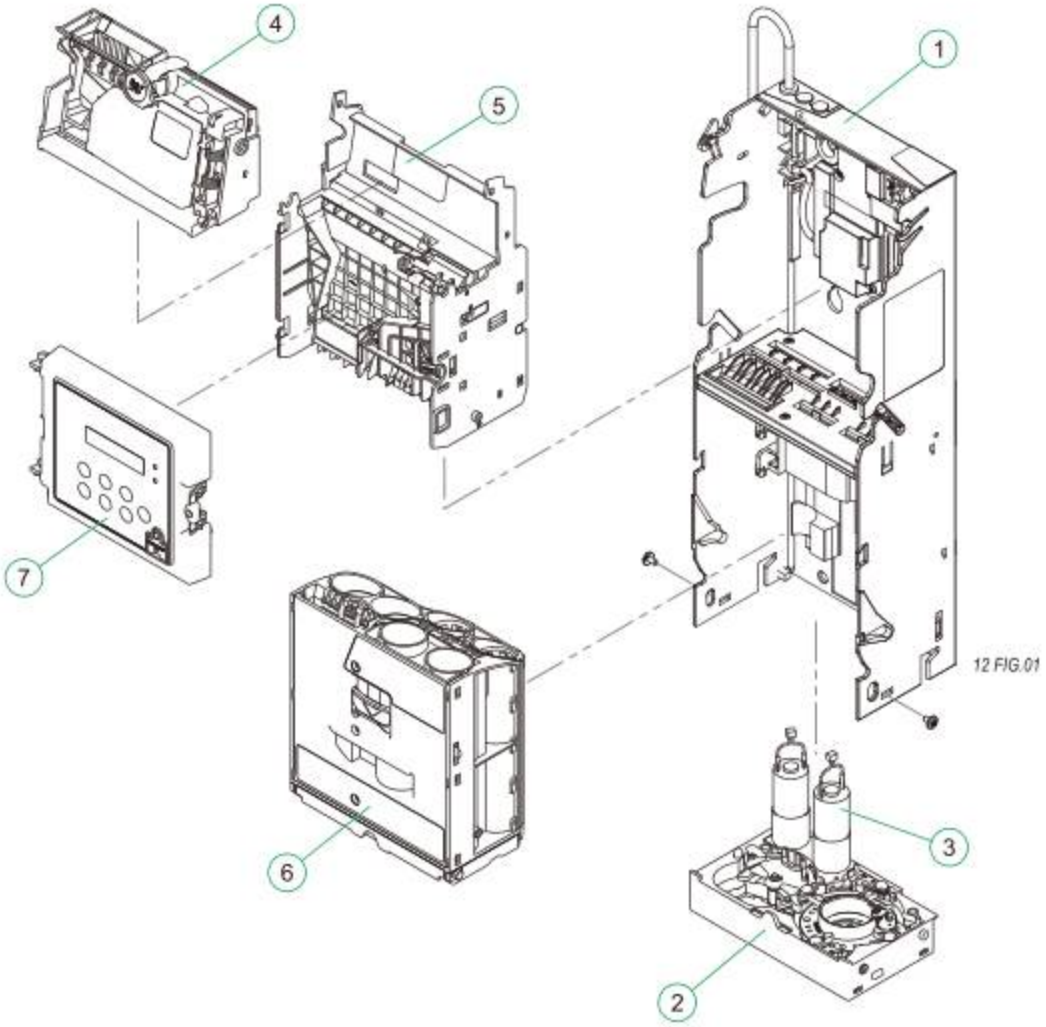

12 FIG.01

12 TABLE 01

Order	Part Number	Appellation	Quantity
1	3RCC-CAS05001	Coin Change Main Machine Module	1
2	3RCC-POK19000	Coin Changer-Coin Discharge Module	1
3	3RCC-MOT02001	Changer Coin Discharge Motor Module	1
4	3RCC-IDE011002	Identification Module (2.5mm)	1
5	3RCC-SOR11006	Coin Separation Module (ESCROW-A)	1
6	3RCC-TUB25004	Coin Tube Module (TWD Version-2)	1
7	3RCC-FAC01002	LCM Display Panel Module	1

iCT Taiwan

International Currency Technologies Corporation

No.28, Ln. 15, Sec. 6, Minquan E. Rd., Neihu Dist., Taipei City 114, Taiwan

sales@ictgroup.com.tw (For Sales) · fae@ictgroup.com.tw (For Customer Service)

Website: www.ictgroup.com.tw

www.ictgroup.com.tw

©2013 International Currency Technologies Corporation
V. 7.0 Part Number: H6463F-R